Errata

(21)

Figure QW-466.1
Test Jig Dimensions

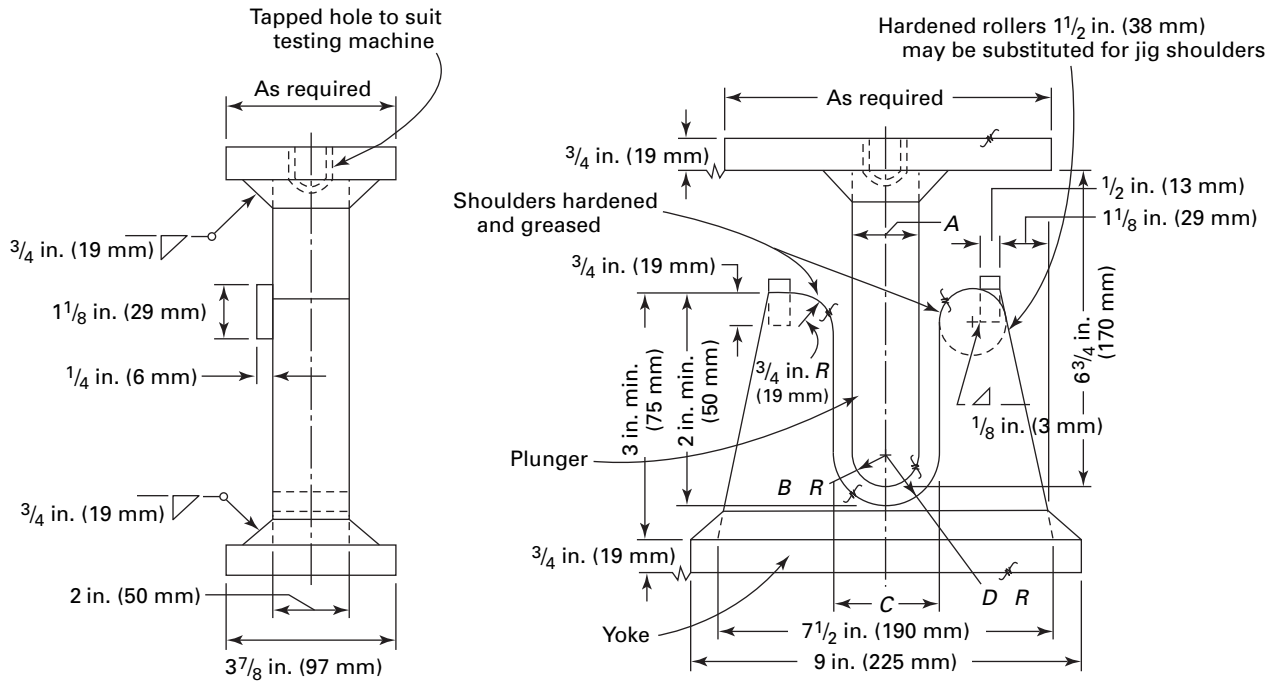

U.S. Customary Units

Material	Thickness of Specimen, t, in.	A, in. Max.	B, in. Max.	C, in.	D, in.
P-No. 23 to P-No. 21 through P-No. 25; P-No. 21 through P-No. 25 with F-No. 23 or 26; P-No. 35; any P-No. metal with F-No. 33, 36, or 37	1/8 Less than 1/8	2 1/16 16 1/2 t	1 1/32 8 1/4 t	2 3/8 max. $A + 2t + 1/8$	1 3/16 max. $C/2 + 1/16$
P-No. 11A, P-No. 11B; P-No. 25 to P-No. 21 or P-No. 22 or P-No. 25	3/8 Less than 3/8	2 1/2 6 2/3 t	1 1/4 3 1/3 t	3 3/8 max. $A + 2t + 1/8$	1 11/16 max. $C/2 + 1/16$
P-No. 51; P-No. 49	3/8 Less than 3/8	3 8t	1 1/2 4t	3 7/8 max. $A + 2t + 1/8$	1 15/16 max. $C/2 + 1/16$
P-No. 52; P-No. 53; P-No. 61; P-No. 62	3/8 Less than 3/8	3 3/4 10t	1 7/8 5t	4 5/8 max. $A + 2t + 1/8$	2 5/16 max. $C/2 + 1/16$
All others with greater than or equal to 20% elongation	3/8 Less than 3/8	1 1/2 4t	3/4 2t	2 3/8 max. $A + 2t + 1/8$	3/16 max. $C/2 + 1/16$
All others with 3% to less than 20% elongation	[Note (1)]	32 3/8 t	16 3/16 t	$A + 2t + 1/8$	$C/2 + 1/16$

Correct this to 1 3/16 max.