Division 3
Subsection WB
Markups

Three Pages

Figure WB-3224.1-1
Stress Categories and Limits of Stress Intensity for Accident Loadings for Elastic Analysis

Stress Category	Primary [Notes (1), (2)]		Secondary [Note (1)]	
	General Membrane	Bending	Membrane Plus Bending	Peak [Note (1)]
Description (for examples, see Table WB-3217-1)	Average primary stress across solid section. Excludes discontinuities and concentrations. Produced by pressure and mechanical loads.	Component of primary stress proportional to distance from centroid of solid section. Excluding discontinuities and concentrations. Produced by pressure and mechanical loads.	Self-equilibrating stress necessary to satisfy continuity of structure. Occurs at structural discontinuities. Can be caused by mechanical loads or by differential thermal expansion. Excludes local stress concentration.	Increment added to primary or secondary stress by a concentration (notch). Certain thermal stresses that may cause fatigue but not distortion of vessel shape.
Symbol [Note (1)]	P_m WB-3213.6 and WB-3213.8	P_b WB-3213.7 and WB-3213.8	Q WB-3213.9	F WB-3213.11
Combination of stress components and allowable limits of stress intensities	P_m — $2.4S_m$ / $0.7S_u$ Note (3)	$P_m + P_b$ — $3.6S_m$ / $1.0S_u$ Note (3)		$P_m + P_b + Q + F$ — $2S_a$ @ 10 cycles

Legend: ○ = Allowable Value □ = Calculated Value

NOTES:
(1) The symbols P_m, P_b, Q, and F do not represent single quantities, but sets of six quantities representing the six stress components: σ_t, σ_l, σ_r, τ_{lt}, τ_{tr}, τ_{rl}.
(2) For configurations where compressive stresses occur, the stress limits shall be revised to take into account critical buckling stresses [WB-3211(c)].
(3) Use the lesser of the values specified.

EDITOR: MOVE "Note (3)" CLOSER TO TWO LIMIT OVALS

Copyright © 2013 by the American Society of Mechanical Engineers.
No reproduction may be made of this material without written consent of ASME.

(d) The bolting analysis shall consider prying effects, which cause amplification of the bolt loads due to rotation of the closure surfaces.

(e) Bolting analysis shall consider bolt preload application methodology and resulting bolt forces.

(f) Gasket characteristics and leak tightness requirements shall be considered in the bolting analysis.

WB-3231 Design Limits

The number and cross-sectional area of bolts required to resist the Design Pressure shall be determined in accordance with the procedures of Section III Appendices, Nonmandatory Appendix E, using the larger of the bolt loads, given by the equations of Section III Appendices, Nonmandatory Appendix E, as a Design Mechanical Load. The stress limits shall be the values given in Section II, Part D, Subpart 1, Table 4 for bolting material.

WB-3232 Level A Service Limits

Actual stresses in bolts, such as those produced by the combination of preload, pressure, and differential thermal expansion, may be higher than the values given in Section II, Part D, Subpart 1, Table 4.

WB-3232.1 Average Stress. The maximum value of stress, averaged across the bolt cross section and neglecting stress concentrations, shall not exceed two times the stress values of Section II, Part D, Subpart 1, Table 4.

WB-3232.2 Shear Stress. The average bolt shear stress expressed in terms of available shear stress area shall not exceed $1.2S_m$ (at temperature) from Section II, Part D, Subpart 1, Table 4.

WB-3232.3 Maximum Stress. The maximum value of stress, except as restricted by WB-3232.4(b), at the periphery of the bolt cross section resulting from direct tension plus bending and neglecting stress concentrations shall not exceed three times the stress values of Section II, Part D, Subpart 1, Table 4. Stress intensity, rather than maximum stress, shall be limited to this value when the bolts are tightened by methods other than heaters, stretchers, or other means which minimize residual torsion.

WB-3232.4 Fatigue Analysis of Bolts. Unless the components on which they are installed meet all the conditions of WB-3222.9(d) and thus require no fatigue analysis, the suitability of bolts for cyclic service shall be determined in accordance with the procedures of (a) through (e) below. Thermal stress ratchet shall be evaluated in accordance with WB-3222.9(a).

(a) Bolting Having Less Than 100.0 ksi (689 MPa) Tensile Strength. Bolts made of material which has specified minimum tensile strength of less than 100.0 ksi (689 MPa) shall be evaluated for cyclic service by the methods of WB-3222.9(e), using the applicable design fatigue curve of Section III Appendices, Mandatory Appendix I, Figures I-9.0 and an appropriate fatigue strength reduction factor [(c)].

(b) High Strength Alloy Steel Bolting. High strength alloy steel bolts and studs may be evaluated for cyclic service by the methods of WB-3222.9(e) using the design fatigue curve of Section III Appendices, Mandatory Appendix I, Figures I-9.2 through I-9.8, provided:

(1) the maximum value of the stress (WB-3232.3) at the periphery of the bolt cross section, resulting from direct tension plus bending and neglecting stress concentration, shall not exceed $2.7S_m$ if the higher of the two fatigue design curves given in Section III Appendices, Mandatory Appendix I, Figure I-9.4 is used. The $2S_m$ limit for direct tension is unchanged.

(2) threads shall be of a Vee-type having a minimum thread root radius no smaller than 0.003 in. (0.08 mm).

(3) fillet radii at the end of the shank shall be such that the ratio of fillet radius to shank diameter is not less than 0.060.

(c) Fatigue Strength Reduction Factor (WB-3213.17). Unless it can be shown by analysis or tests that a lower value is appropriate, the fatigue strength reduction factor used in the fatigue evaluation of threaded members shall be not less than 4.0. However, when applying the rules of (b) for high strength alloy steel bolts, the value used shall be not less than 4.0

(d) Effect of Elastic Modulus. Multiply S_{alt} (as determined in WB-3216.1 or WB-3216.2) by the ratio of the modulus of elasticity given on the design fatigue curve to the value of the modulus of elasticity used in the analysis. Enter the applicable design fatigue curve at this value on the ordinate axis and find the corresponding number of cycles on the abscissa. If the cyclic service being considered is the only one which produces significant fluctuating stresses, this is the allowable number of cycles.

(e) Cumulative Damage. The bolts shall be acceptable for the specified cyclic application of loads and thermal stresses provided the cumulative usage factor U, as determined in WB-3222.9(e)(5), does not exceed 1.0.

WB-3234 Level D Service Limits

(a) The rules contained in Section III Appendices, Nonmandatory Appendix F may be used in evaluating loadings for which Level D Service Limits are specified, independently of all other loadings.

(b) If leak tightness of the closure is required by the Design Specification, the analysis of the bolting shall demonstrate that no yielding occurs in the bolt or sealing surface materials. This requirement may be satisfied by using the rules of WB-3232.

WB-3235 Testing Limits

Bolts shall not yield for test conditions.

Copyright © 2013 by the American Society of Mechanical Engineers.
No reproduction may be made of this material without written consent of ASME.

r_1 = $\frac{1}{4}t$ or $\frac{3}{4}$ in. (19 mm), whichever is less
r_2 = $\frac{1}{4}$ in. (6 mm) minimum
t = nominal thickness of part penetrated, in.
t_c = $0.7t_n$ or $\frac{1}{4}$ in. (6 mm), whichever is less
t_n = nominal thickness of penetrating part

(e) Use of Deposited Weld Metal for Openings and Connections

(1) Connections shall meet the fabrication requirements of WB-4244(c) and shall be capable of being examined in accordance with WB-5244.

(2) When the deposited weld metal is used as reinforcement, the coefficients of thermal expansion of the base metal, the weld metal, and the connection shall not differ by more than 15% of the lowest coefficient involved.

(3) The minimum dimensions of Figure WB-4244(c)-1 shall be met, where

r_1 = $\frac{1}{4}t$ or $\frac{3}{4}$ in. (19 mm), whichever is less
t = nominal thickness of part penetrated
t_c = $0.7t_n$ or $\frac{1}{4}$ in. (6 mm), whichever is less
t_n = nominal thickness of penetrating part

(4) The corners of the end of each connection extending less than $\sqrt{dt_n}$ beyond the inner surface of the part penetrated shall be rounded to a radius of one-half the thickness t_n of the connection or $\frac{3}{4}$ in. (19 mm), whichever is smaller.

(f) Attachment of Connections Using Partial Penetration Welds

(1) Partial penetration welds used for connections as permitted in (b) shall meet the fabrication requirements of WB-4244(d) and shall be capable of being examined in accordance with the requirements of WB-5245.

(2) The minimum dimensions of Figure WB-4244(d)-1 shall be met.

where

d = outside diameter of the connecting item
r_1 = $\frac{1}{4}t_n$ or $\frac{3}{4}$ in. (19 mm), whichever is less
t = nominal thickness of part penetrated
t_c = $0.7t_n$ or $\frac{1}{4}$ in. (6 mm), whichever is less
t_n = nominal thickness of penetrating part

(3) The corners of the end of each connecting item, extending less than $\sqrt{dt_n}$ beyond the inner surface of the part penetrated, shall be rounded to a radius of one-half of the thickness t_n of the penetrating part or $\frac{3}{4}$ in. (19 mm), whichever is smaller.

(4) Weld groove design for partial penetration joints attaching connecting item may require special consideration to achieve the $1.25t_n$ minimum depth of weld and adequate access for welding examination. The welds shown in the sketches of Figure WB-4244(d)-1 may be on either the inside or the outside of the containment shell. Weld preparation may be J-groove, as shown in the figures, or straight bevel.

(5) A fatigue strength reduction factor of not less than four shall be used when fatigue analysis is required.

WB-3254 Structural Attachment Welds

Welds for structural attachments shall meet the requirements of WB-4430.

WB-3255 Welding Grooves

The dimensions and shape of the edges to be joined shall be such as to permit complete fusion and complete joint penetration, except as otherwise permitted in WB-3252.4.

WB-3256 Thermal Treatment

All containments and containment parts shall be given the appropriate postweld heat treatment prescribed in WB-4620.

WB-3260 SPECIAL CONTAINMENT REQUIREMENTS

WB-3261 Category A or Category B Joints Between Sections of Unequal Thickness

In general, a tapered transition section as shown in Figure WB-3261-1, which is a type of gross structural discontinuity (WB-3213.2), shall be provided at joints of Categories A and B between sections that differ in thickness by more than one-fourth the thickness of the thinner section. The transition section may be formed by any process that will provide a uniform taper. An ellipsoidal or hemispherical head that has a greater thickness than a cylinder of the same inside diameter may be machined to the outside diameter of the cylinder, provided the remaining thickness is at least as great as that required for a shell of the same diameter. A uniform taper is not required for flanged hubs. The adequacy of the transition shall be evaluated by stress analysis. Stress intensity limitations are given in WB-3220. The requirements of this paragraph do not apply to flange hubs.

WB-3700 STRAIN-BASED ACCEPTANCE CRITERIA (13)

The strain-based acceptance criteria are applicable only to the metallic containments of transportation packagings weighing more than 1,100 lb (500 kg). It is not the intent of this subarticle to permit significant regions or major portions of the containment to experience strains at or near the limits of these strain-based acceptance criteria without consideration of the overall component deformation. These strain-based acceptance criteria are established to address the regions of the containment that experience high strains due to the effects of direct impacts. Deformation limits, if any, provided in the Design Specification shall be satisfied.

Section III Appendices, Nonmandatory Appendix FF provides the strain-based acceptance criteria.

Copyright © 2013 by the American Society of Mechanical Engineers.
No reproduction may be made of this material without written consent of ASME.

Division 3
Subsection WC
Markups

Eight pages

effects by indicating the increase in the thickness of the base metal over that determined by the design analysis (WC-3200). Other suitable methods of protection may be used. Material added or included for these purposes need not be of the same thickness for all areas of the containment if different rates of attack are expected for the various areas.

WC-3122 Cladding

The rules of this Paragraph apply to the design of clad containments constructed of materials permitted in Tables 2A, 2B, and 4, Section II, Part D, Subpart 1.

WC-3122.1 Stresses. Except as permitted by WC-3214, no structural strength shall be attributed to the cladding.

WC-3122.2 Design Dimensions. The dimensions given in (a) and (b) below shall be used in the design of the containment.

(a) For containments subjected to internal pressure, the inside diameter shall be taken at the nominal inner face of the cladding.

(b) For containments subjected to external pressure, the outside diameter shall be taken at the outer face of the base metal.

WC-3123 Welds Between Dissimilar Metals

In satisfying the requirements of this Subarticle, caution shall be exercised in construction involving dissimilar metals having different chemical compositions, mechanical properties, and coefficients of thermal expansion in order to avoid difficulties in service.

WC-3130 GENERAL DESIGN RULES

The design shall be such that the rules of this Article are satisfied for all configurations and loadings using the stress intensity values of WC-3112.4 and including the use of standard products listed in Table WA-7100-1.

WC-3131 Design Reports

The Certificate Holder shall provide a Design Report conforming to the requirements of WC-3211.

WC-3132 Dimensional Standards for Standard Products

Dimensions of standards products shall comply with the standards and specifications listed in Table WA-7100-1 when the standard or specification is referenced in the specific design Subarticle. However, compliance with these standards does not replace or eliminate the requirements for stress analysis when called for by the design Subarticle for a specific containment.

WC-3133 Containments Under External Pressure

WC-3133.1 General. Rules are given in this paragraph for determining the thickness under external pressure loading in spherical and cylindrical shells without stiffening rings. Charts for determining the stresses in shells and hemispherical heads are given in Section II, Part D, Subpart 3.

WC-3133.2 Nomenclature. The symbols used in this paragraph are defined as follows:

A = factor determined from Figure G in Section II, Part D, Subpart 3 and used to enter the applicable material chart in Section II, Part D, Subpart 3. For the case of cylinders having D_o/T values less than 10, see WC-3133.3(b).

B = factor determined from the applicable chart in Section II, Part D, Subpart 3 for the material used in a shell at the design metal temperature, psi (MPa)

D_o = outside diameter of the cylindrical shell

E = modulus of elasticity of material at Design Temperature, psi (MPa). For external pressure and axial compression design in accordance with this Article, the modulus of elasticity to be used shall be taken from the applicable materials chart in Section II, Part D, Subpart 3. (Interpolation may be made between lines for intermediate temperatures.) The modulus of elasticity values shown in Section II, Part D, Subpart 3 for material groups may differ from those values listed in Tables TM, Section II, Part D, Subpart 2 for specific materials. Section II, Part D, Subpart 3 values shall be applied only to external pressure and axial compression design.

L = the design length of a containment taken as the distance between head tangent lines plus one-third of the depth of each head

P = external Design Pressure, psi (MPa) (gage or absolute, as required)

P_a = allowable external pressure, psi (MPa) (gage or absolute, as required)

R = inside radius of spherical shell

S = the lesser of 1.5 times the stress intensity at design metal temperature from Section II, Part D, Subpart 1, Tables 2A and 2B or 0.9 times the tabulated yield strength at design metal temperature from Table Y-1, Section II, Part D, Subpart 1, psi (MPa)

T = minimum required thickness of cylindrical shell or spherical shell

T_n = nominal thickness used, less corrosion allowance, of a cylindrical shell

WC-3133.3 Cylindrical Shells. The thickness of cylinders under external pressure shall be determined by the procedure given in (a) or (b) below.

(a) Cylinders Having D_o/T Values ≥ 10

Step 1. Assume a value for T and determine the ratios L/D_o and D_o/T.

Copyright © 2013 by the American Society of Mechanical Engineers.
No reproduction may be made of this material without written consent of ASME.

Step 2. Enter Figure G in Section II, Part D, Subpart 3 at the value of L/D_o determined in Step 1. For values of L/D_o greater than 50, enter the chart at a value of L/D_o = 50. For values of L/D_o less than 0.05, enter the chart at a value of L/D_o of 0.05.

Step 3. Move horizontally to the line for the value of D_o/T determined in Step 1. Interpolation may be made for immediate values of D_o/T. From this point of intersection move vertically downward to determine the value of factor A.

Step 4. Using the value of A calculated in Step 3, enter the applicable material chart in Section II, Part D, Subpart 3 for the material under consideration. Move vertically to an intersection with the material/temperature line for the Design Temperature. Interpolation may be made between lines for intermediate temperatures. In cases where the value of A falls to the right of the end of the material/temperature line, assume an intersection with the horizontal projection of the upper end of the material/temperature line. For values of A falling to the left of the material/temperature line, see Step 7.

Step 5. From the intersection obtained in Step 4, move horizontally to the right and read the value of B.

Step 6. Using this value of B, calculate the value of the maximum allowable external pressure P_a using the following equation:

$$P_a = \frac{4B}{3(D_o/T)}$$

Step 7. For values of A falling to the left of the applicable material/temperature line, the value of P_a can be calculated using the following equation:

$$P_a = \frac{2AE}{3(D_o/T)}$$

Step 8. Compare P_a with P. If P_a is smaller than P, select a larger value for T and repeat the design procedure until a value of P_a is obtained that is equal to or greater than P.

(b) Cylinders Having D_o/T Values < 10

Step 1. Using the same procedure as given in (a) above, obtain the value of B. For values of D_o/T less than 4, the value of factor A can be calculated using the following equation:

$$A = \frac{1.1}{(D_o/T)^2}$$

For values of A greater than 0.10, use a value of 0.10.

Step 2. Using the value of B obtained in Step 1, calculate a value P_{a1} using the following equation:

$$P_{a1} = \left[\frac{2.167}{(D_o/T)} - 0.0833\right]B$$

ADD space

Step 3. Calculate a value P_{a2} using the following equation:

$$P_{a2} = \frac{2S}{D_o/T}\left[1 - \frac{1}{D_o/T}\right]$$

Step 4. The smaller of the values of P_{a1} calculated in Step 2, or P_{a2} calculated in Step 3 shall be used for the maximum allowable external pressure P_a. Compare P_a with P. If P_a is smaller than P, select a larger value for T and repeat the design procedure until a value for P_a is obtained that is equal to or greater than P.

WC-3133.4 Spherical Shells and Formed Heads.

(a) Spherical Shells. The minimum required thickness of a spherical shell under external pressure shall be determined by the procedure given in Steps 1 through 6.

Step 1. Assume a value for T and calculate the value of factor A using the following equation:

$$A = \frac{0.125}{(R/T)}$$

Step 2. Using the value of A calculated in Step 1, enter the applicable material chart in Section II, Part D, Subpart 3 for the material under consideration. Move vertically to an intersection with the material/temperature line for the Design Temperature. Interpolation may be made between lines for intermediate temperatures. In cases where the value at A falls to the right of the end of the material/temperature line, assume an intersection with the horizontal projection of the upper end of the material/temperature line. For values of A falling to the left of the material/temperature line, see Step 5.

Step 3. From the intersection obtained in Step 2, move horizontally to the right and read the value of factor B.

Step 4. Using the value of B obtained in Step 3, calculate the value of the maximum allowable external pressure P_a using the following equation:

$$P_a = \frac{B}{(R/T)}$$

Step 5. For values of A falling to the left of the applicable material/temperature line for the Design Temperature, the value of P_a can be calculated using the following equation:

$$P_a = \frac{0.0625E}{(R/T)^2}$$

Step 6. Compare P_a obtained in Step 4 or 5 with P. If P_a is smaller than P, select a larger value for T and repeat the design procedure until a value for P_a is obtained that is equal to or greater than P.

(b) The nomenclature defined below is used in the equations of (c) through (e) below.

D = inside length of the major axis of an ellipsoidal head

Copyright © 2013 by the American Society of Mechanical Engineers.
No reproduction may be made of this material without written consent of ASME.

D_o = outside diameter of the head skirt at the point under consideration
h = one-half of the length of the minor axis of the ellipsoidal head, or the inside depth of the ellipsoidal head measured from the tangent line, head bend line
K_1 = a factor depending on the ellipsoidal head proportions, given in Table WC-3133.4-1
R = for hemispherical heads, the inside radius in the corroded condition
= for ellipsoidal heads, the equivalent inside spherical radius taken as $K_1 D_o$ in the corroded condition
= for torispherical heads, the inside radius of the crown portion of the head in the corroded condition
T = minimum required thickness of head after forming, exclusive of corrosion allowance

(c) Hemispherical Heads. The required thickness of a hemispherical head having pressure on the convex side shall be determined in the same manner as outlined in (a) above for determining the thickness for a spherical shell.

(d) Ellipsoidal Heads. The required thickness of an ellipsoidal head having pressure on the convex side, either seamless or of built-up construction with butt joints, shall not be less than that determined by the following procedure.

Step 1. Assume a value for T and calculate the value of factor A using the following equation:

$$A = \frac{0.125}{(R/T)}$$

Step 2. Using the value of A calculated in Step 1, follow the same procedure as that given for spherical shells in Steps (a)2 through (a)6.

(e) Torispherical Heads. The required thickness of a torispherical head having pressure on the convex side, either seamless or of built-up construction with butt joints, shall not be less than that determined by the same design procedure as is used for ellipsoidal heads given in (d) above, using the appropriate value for R.

Table WC-3133.4-1
Values of Spherical Radius Factor K_1

$D/2h$	...	3.0	2.8	2.6	2.4	2.2
K_1	...	1.36	1.27	1.18	1.08	0.99
$D/2h$	2.0	1.8	1.6	1.4	1.2	1.0
K_1	0.90	0.81	0.73	0.65	0.57	0.50

GENERAL NOTES:
(a) Equivalent spherical radius = $K_1 D$.
(b) $D/2h$ = axis ratio.
(c) Interpolation permitted for intermediate values.

WC-3133.6 Cylinders Under Axial Compression. The maximum allowable compressive stress to be used in the design of cylindrical shells subjected to loadings that produce longitudinal compressive stresses in the shell or wall shall be the lesser of the values given in (a) or (b) below:

(a) the S_m value for the applicable material at Design Temperature given in Tables 2A and 2B, Section II, Part D, Subpart 1;

(b) the value of the B determined from the applicable chart in Section II, Part D, Subpart 3 using the following definitions for the symbols on the charts:

R = inside radius of the cylindrical shell
T = selected thickness of the shell, exclusive of the corrosion allowance

The value of B shall be determined from the applicable chart contained in Section II, Part D, Subpart 3 as given in Steps 1 through 5.

Step 1. Using the selected values of T and R, calculate the value of factor A using the following equation:

$$A = \frac{0.125}{(R/T)}$$

Step 2. Using the value of A calculated in Step 1, enter the applicable material chart in Section II, Part D, Subpart 3 for the material under consideration. Move vertically to an intersection with the material/temperature line for the Design Temperature. Interpolation may be made between lines for intermediate temperatures. In cases where the value at A falls to the right of the end of the material/temperature line, assume an intersection with the horizontal projection of the upper end of the material/temperature line. For values of A falling to the left of the material/temperature line, see Step 4.

Step 3. From the intersection obtained in Step 2, move horizontally to the right and read the value of factor B. This is the maximum allowable compressive stress for the values of T and R used in Step 1.

Step 4. For values of A falling to the left of the applicable material/temperature line, the value of B shall be calculated using the following equation:

$$B = \frac{AE}{2}$$

Step 5. Compare the value of B determined in Step 3 or 4 with the computed longitudinal compressive stress in the cylindrical shell, using the selected values of T and R. If the value of B is smaller than the computed compressive stress, a greater value of T must be selected and the design procedure repeated until a value of B is obtained which is greater than the compressive stress computed for the loading on the cylindrical shell.

Copyright © 2013 by the American Society of Mechanical Engineers.
No reproduction may be made of this material without written consent of ASME.

S = membrane stress intensity limit from Tables 2A and 2B, Section II, Part D, Subpart 1 multiplied by the stress intensity factor in Table WC-3217-1
= kS_m psi (MPa)
t = minimum thickness of shell

WC-3224.3 Minimum Thickness of Cylindrical Shells. The minimum thickness of cylindrical shells shall be the greatest of the thicknesses determined by (a), (b), and (c) below.

(a)

$$t = \frac{PR}{S - 0.5P}$$

If $P > 0.4S$, the following equation must be used:

$$\ln\frac{(R + t)}{R} = \frac{P}{S}$$

where ln is the natural log.

(b) If F is positive and exceeds $0.5PR$,

$$t = \frac{0.5PR + F}{S - 0.5P}$$

(c) If F is negative, the condition of axial structural instability or buckling shall be considered separately [see WC-3112.4(b)].

WC-3224.4 Minimum Thickness of Spherical Shells. The minimum thickness of spherical shells shall be the greatest of the thicknesses determined by (a), (b), and (c) below.

(a)

$$t = \frac{0.5PR}{S - 0.25P}$$

If $P > 0.4S$, the following equation may be used:

$$ln\frac{(R + t)}{R} = \frac{0.5P}{S}$$

(b) If F is positive

$$t = \frac{0.5PR + F}{S - 0.25P}$$

(c) If F is negative, the condition of instability shall be considered. WC-3112.4(b) for cylinders may be used for spheres, provided biaxial compression does not exist.

WC-3224.5 Minimum Thickness of Formed Heads. The minimum thickness at the thinnest point after forming of ellipsoidal, torispherical, and hemispherical heads under pressure acting against the concave surface shall be determined by the appropriate rule or equation in the following subparagraphs.

WC-3224.6 Minimum Thickness of Ellipsoidal Heads.[37,38] The minimum thickness of a 2:1 ellipsoidal head shall be established using the procedures given in WC-3224.8 and the curve of Figure WC-3224.6-1, which is labeled "2:1 ellipsoidal head." Ellipsoidal head designs which have $D/2h$ values different from 2 shall be analyzed as equivalent torispherical heads or according to Section III Appendices, Mandatory Appendix II, XIII, or XIV. The cylindrical shell to which the head is attached shall be equal to or greater in thickness than the required head thickness for a distance, measured from the tangent line along the cylinder, of not less than $\sqrt{Rt}$. Transition joints to shells of thickness less than the required head thickness shall not be located within the minimum distance. Transition joints to shells of thickness greater than the required head thickness may be located within this minimum distance and shall be in accordance with WC-3260 and Figure WC-3261-1.

WC-3224.7 Minimum Thickness of Hemispherical Heads. For hemispherical heads, the thickness shall be as required for spherical shells, WC-3224.4. The requirements for the transition to cylindrical shells of different thickness, given in WC-3260 and Figure WC-3261-1 shall be met.

WC-3224.8 Minimum Thickness of Torispherical Heads.[37] The minimum thickness of a torispherical head having $t/L \geq 0.002$ up to a t/L where $P/S \leq 0.08$ (approximately $t/L = 0.04$ to 0.05) shall be established by using the curves in Figure WC-3224.6-1. Interpolation may be used for r/D values which fall within the range of curves; however, no extrapolation of the curves is permitted. For designs where $P/S > 0.08$, which is above the upper limit of Figure WC-3224.6-1, the thickness shall be set by the following equation:

$$t = \frac{D}{2}\left(e^{P/S} - 1\right)$$

Where $t/L < 0.002$, which is below the lower limit of Figure WC-3224.6-1, the head design must be analyzed according to Section III Appendices, Mandatory Appendix II, XIII, or XIV. The cylindrical shell to which the head is attached shall be equal to or greater in thickness than the required head thickness for a distance, measured from the tangent line along the cylinder, of not less than $\sqrt{Rt}$. Transition joints to shells of thickness less than the required head thickness shall not be located within this minimum distance. Transition joints to shells of thickness greater than the required head thickness may be located within this minimum distance and shall be in accordance with WC-3260 and Figure WC-3261-1.

WC-3224.8.1 Crown and Knuckle Radii. In connection with the design procedures of WC-3224.8 and Figure WC-3224.6-1, the inside crown radius to which an unstayed head is formed shall not be greater than the inside diameter of the skirt of the head. The inside knuckle radius of a torispherical head shall not be less than 6% of the outside diameter of the skirt nor less than three times the head thickness.

Copyright © 2013 by the American Society of Mechanical Engineers.
No reproduction may be made of this material without written consent of ASME.

Figure WC-3225-3
Attachment of Flat Heads to Containment Shell

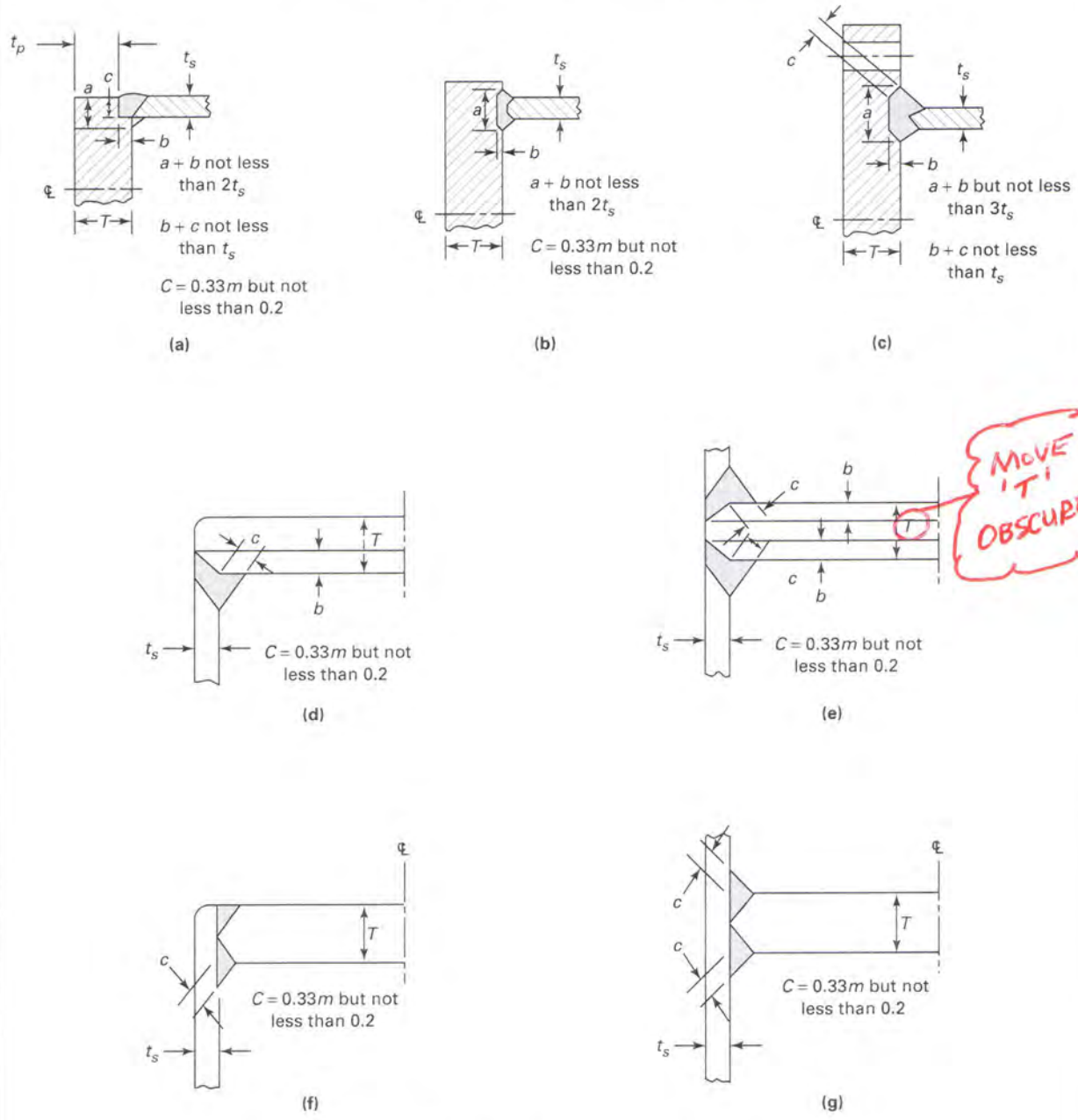

C min = 0.7 t_s or $^1/_4$ in. (6 mm), whichever is less
b = the lesser of t_s or T/2

Copyright © 2013 by the American Society of Mechanical Engineers.
No reproduction may be made of this material without written consent of ASME.

Figure WC-3251-1
Welded Joint Locations Typical of Categories A, B, C, and D

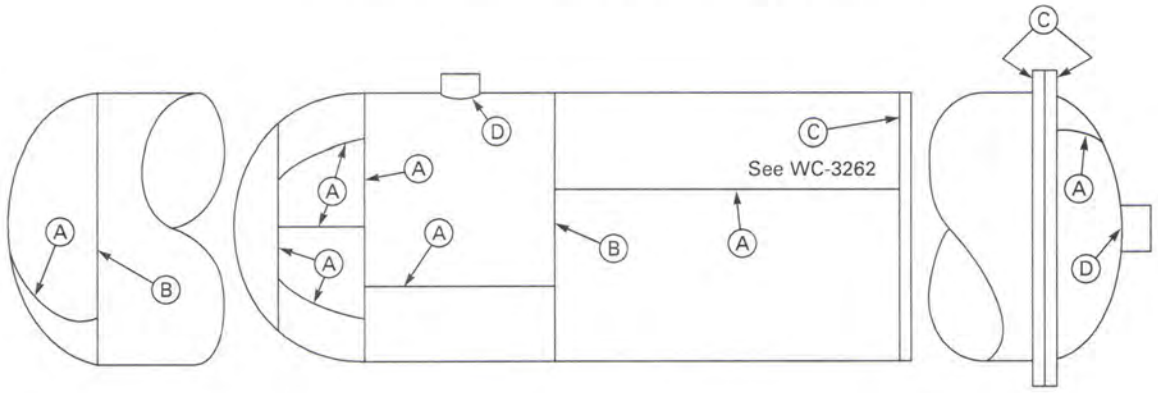

FILL IN BLANK AREA

Copyright © 2013 by the American Society of Mechanical Engineers.
No reproduction may be made of this material without written consent of ASME.

(b) Figure WC-4265-1, sketches (c) and (d)

c = 0.7 t_s or 1/4 in. (6 mm), whichever is less
T, t_s = nominal thickness of welded parts

(c) Figure WC-4265-1, sketch (e)

$a + b$ = not less than $2t_s$
b = not less than t_s
t_p = not less than t_s
t_s = actual thickness of shell

(d) Hubs for butt welding to the adjacent shell, head, or other containment part, as in Figure WC-4265-3, shall not be machined from rolled plate. The component having the hub shall be forged in such a manner as to provide in the hub the full minimum tensile strength and elongation specified for the material, in a direction parallel to the axis of the vessel. Proof of this shall be furnished by a tension test specimen (subsize if necessary) taken in this direction and as close to the hub as is practical. In Figure WC-4265-3, the minimum dimensions are as follows:

(1) sketch (a), r not less than $1.5t_s$

(2) sketch (b), r not less than $1.5t_s$ and e not less than t_s

(3) sketch (c), r not less than $1.5t_s$

(4) sketch (d), t_f not less than $2t_s$ and r not less than $3t_f$

(5) sketch (e), t_f not less than $2t_s$, r not less than $3t_f$, and e not less than t_f

WC-3252.4 Joints of Category D. All welded joints of Category D, as defined in WC-3251, shall be in accordance with the requirements of (a) through (e).

(a) Butt Welded Nozzles. Nozzles shall meet the fabrication requirements of WC-4266(a) and shall be capable of being examined in accordance with WC-5242. The minimum dimensions and geometrical requirements of Figure WC-4266(a)-1 shall be met, where

r_1 = 1/4t or 3/4 in. (19 mm), whichever is less
r_2 = 1/4 in. (6 mm) min.
t = nominal thickness of part penetrated, in.
t_n = nominal thickness of penetrating part, in.

(b) Full Penetration Corner Welded Nozzles. Nozzles shall meet the fabrication requirements of WC-4266(b) and shall be capable of being examined in accordance with WC-5243. The minimum dimensions and geometrical requirements of Figure WC-4266(b)-1 shall be met, where

r_1 = 1/4t or 3/4 in. (19 mm), whichever is less
r_2 = 1/4 in. (6 mm) min.
t = nominal thickness of part penetrated, in.
t_c = 0.7t_n or 1/4 in. (6 mm), whichever is less
t_n = nominal thickness of penetrating part, in.

(c) Use of Deposited Weld Metal for Openings and Nozzles.

(1) Nozzles shall meet the fabrication requirements of WC-4266(c) and shall be capable of being examined in accordance with WC-5244.

(2) When the deposited weld metal is used as reinforcement, the coefficients of thermal expansion of the base metal, the weld metal, and the connection shall not differ by more than 15% of the lowest coefficient involved.

(3) The minimum dimensions of Figure WC-4266(c)-1 shall be met, where

r_1 = 1/4t or 3/4 in. (19 mm), whichever is less
t = nominal thickness of part penetrated
t_c = 0.7t_n or 1/4 in. (6 mm), whichever is less
t_n = nominal thickness of penetrating part

(4) The corners of the end of each connection extending less than $\sqrt{dt_n}$ beyond the inner surface of the part penetrated shall be rounded to a radius of one-half the thickness t_n of the connection or 3/4 in. (19 mm), whichever is smaller.

(d) Fittings with Internal Threads. Internally threaded fittings shall be limited to NPS 2 (DN 50). Internally threaded fittings shall be attached by means of full penetration groove welds meeting the fabrication requirements of WC-4266(d) and shall be capable of being examined in accordance with WC-5245. The minimum dimensions and geometrical requirements of Figure WC-4266(d)-1 shall be met, where

t_c = 0.7 t_n or 1/4 in. (6 mm), whichever is less
t_n = nominal thickness of neck, in. (mm)

(e) Attachment of Nozzles Using Partial Penetration Welds. Partial penetration welds shall meet the fabrication requirements of WC-4266(e) and shall be capable of being examined in accordance with WC-5245. They shall be used only for attachments such as instrumentation openings and inspection openings, which are subjected to essentially no external mechanical loadings and on which there will be no thermal stresses greater than those on the containment itself. Such attachments shall satisfy the requirements of WC-3231(g).

WC-3254 Structural Attachment Welds

Welds for structural attachments shall meet the requirements of WC-4432.

WC-3255 Welding Grooves

The dimensions and shape of the edges to be joined shall be such as to permit complete fusion and complete joint penetration, except as otherwise permitted in WC-3252.4 or WC-3262.

Copyright © 2013 by the American Society of Mechanical Engineers.
No reproduction may be made of this material without written consent of ASME.

Table WC-3262-1
Stress Reduction Factors and Examinations for Closure Welds

Examination Requirements [Note (1)]	Stress Reduction Factors
Volumetric Examination	1.00
Liquid Penetrant or Magnetic Particle Examination: Root and each successive $^1/_4$ in. (6 mm) of weld thickness and the final layer	0.90
Liquid Penetrant or Magnetic Particle Examination: Root, mid, and final layer [Note (2)]	0.80

NOTES:
(1) All examinations shall be performed and accepted to the requirements of WC-5000.
(2) Mid layer is defined as approximately one half of the maximum weld thickness.

WC-3262.4 For partial penetration closure welds, a fatigue strength reduction factor of not less than 4.0 shall be used when fatigue analysis is required.

WC-3700 STRAIN-BASED ACCEPTANCE CRITERIA (13)

The strain-based acceptance criteria are applicable only to the metallic portions of storage containments. It is not the intent of this subarticle to permit significant regions or major portions of the containment to experience strains at or near the limits of these strain-based acceptance criteria without consideration of the overall component deformation. These strain-based acceptance criteria are established to address the regions of the containment that experience high strains due to the effects of direct impacts. Deformation limits, if any, provided in the Design Specification shall be satisfied.

Section III Appendices, Nonmandatory Appendix FF provides the strain-based acceptance criteria.

Copyright © 2013 by the American Society of Mechanical Engineers.
No reproduction may be made of this material without written consent of ASME.

Division 3
ENDNOTES
Markup

One page

ENDNOTES

1 Rules for Disposal Containments are not yet developed.

2 Rules for internal support structures are under development.

3 SA or SB Specifications listed under the heading Bars, Rods, Shapes, Forgings may be used as material for any of these product forms even though not all product forms are listed in the SA or SB Specification.

4 Applicable only to storage containments (Subsection WC).

5 Level B Service Limits are not used in this Division. Level C Service Limits are applicable only to storage containments (Subsection WC).

6 Part IV of ASME NQA-1 provides guidance for various applications.

7 Samples of the forms referred to in this Subarticle may be found in this Subsection. Copies of these forms may be obtained from the Society (http://www.asme.org/codes/publications/bpvc).

8 Any postweld heat treatment time, which is anticipated to be applied to the material or item after it is completed, shall be specified in the Design Specification. The Certificate Holder shall include this time in the total time at temperature specified to be applied to the test specimens.

9 *Lowest service temperature* (LST) is the minimum metal temperature as detailed in the Design Specification.

10 In addition to providing a basis for acceptance standards for material, the test data are designated to be used as a basis for establishing inservice operation and for use in fracture prevention evaluation [WB-3211(d)].

11 The requirements for impact testing of the heat-affected zone (WB-4335.2) may result in reduced test temperatures or increased toughness requirements for the base metal.

12 The methods given in the Appendix of SFA-5.9, Specification for Corrosion-Resisting Chromium and Chromium-Nickel Steel Welding Rods and Bare Electrodes, shall be used to establish a welding and sampling method for the pad, groove, or other test weld to ensure that the weld deposit being sampled will be substantially free of base metal dilution.

13 The volumetric examinations required by this paragraph need only be conducted from one surface.

14 The direction of ultrasonic examinations referenced is the direction of sound propagation.

15 Level C Service Limits are not used in this Subsection.

16 This definition of stress intensity is not related to the definition of stress intensity applied in the field of Fracture Mechanics.

17 *Equivalent linear stress* is defined as the linear stress distribution that has the same net bending moment as the actual stress distribution.

18 Membrane stress intensity is derived from the stress components averaged across the thickness of the section. The averaging shall be performed at the component level in WB-3215(b) and WB-3215(c).

19 The concept of stress differences discussed in WB-3216 is essential to determination of the maximum range, since algebraic signs must be retained in the computation. Note that this limitation on range is applicable to the entire history of normal loadings, not just to the stresses resulting from each individual transient.

Copyright © 2013 by the American Society of Mechanical Engineers.
No reproduction may be made of this material without written consent of ASME.