VirginiaTech
Invent the Future

CPES
Center for Power Electronics Systems

Evaluation of Two Validation Metrics Using New VV&UQ Framework Applicable to Power Electronics Systems

Niloofar Rashidi, Bo Wen, Rolando Burgos, and Dushan Boroyevich

ASME 2014 V&V Symposium

May 7th, 2014

Outline

- **Motivations and Objectives**
- **Overview of Verification, Validation and Uncertainty Quantification Framework**
- **Validation Metric Definition**
- **System and The System Response Quantity Under Study**
- **Estimate Model form Uncertainty using:**
  - **Mean Comparison**
  - **Area Validation Metric**
  - **Modified Area Validation Metric (Voyles and Roy, 2014)**
- **Summary**

Motivations and Objectives

There are large number of circuit simulators available in power electronics.

Which one is the best for a specific intended use?

Circuit analysts propose different models for different systems.

How much can these models be trusted?

Assume putting a model in a complex system.

How accurate that whole system will be?

Overview of VV&UQ Process

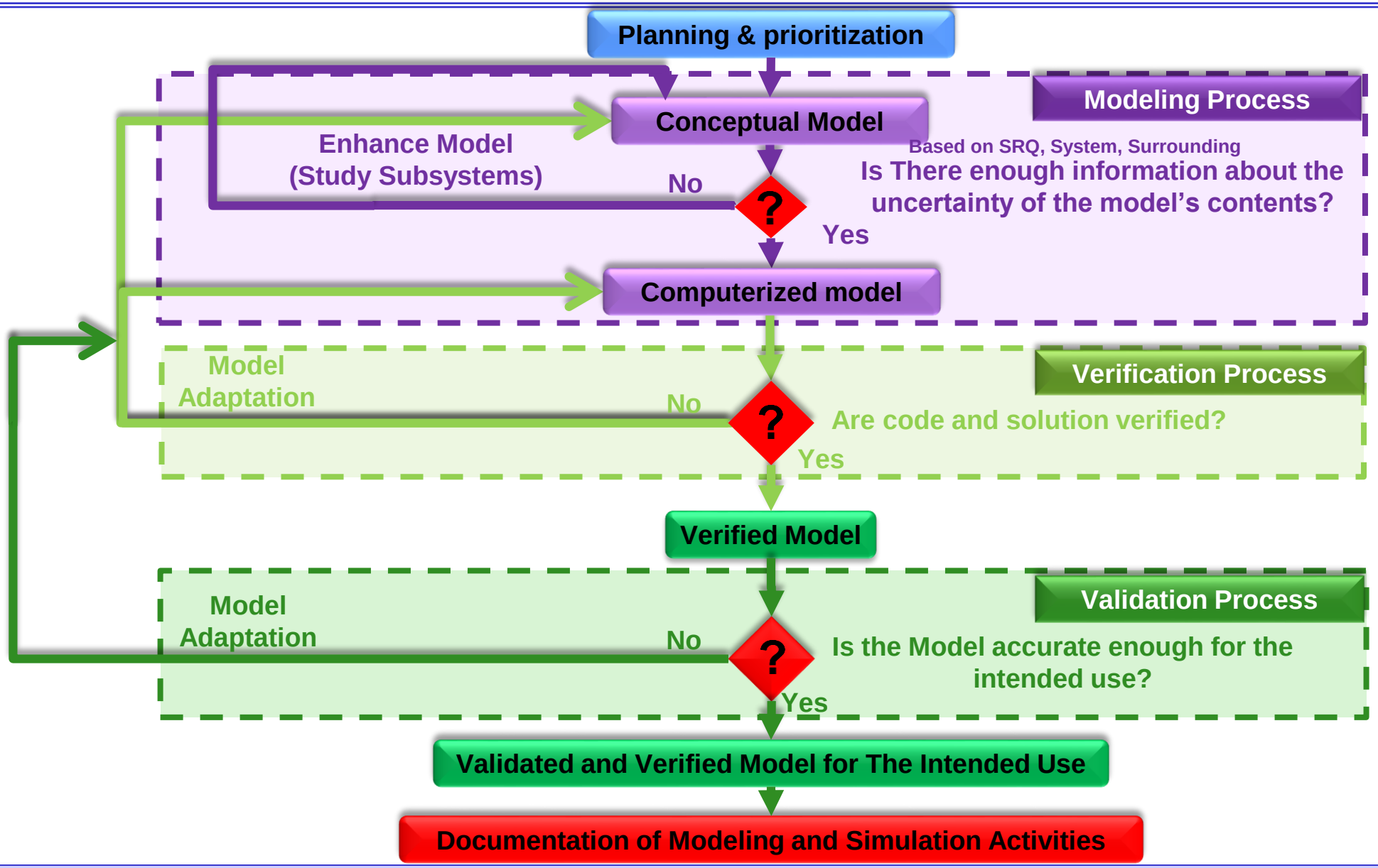

Validation Metric Definition

- **Validation :The process of determining the degree to which a model is an accurate representation of the real world from the perspective of the intended uses of the model. [1]**

- **Validation Metric: Measure of agreement between simulation and experimental results.**

  - **Mean Comparison**
  - **Area Validation Metric**
  - **Modified Area Validation Metric**

[1] AIAA, "Guide for the Verification and Validation of Computational Fluid Dynamics Simulations," *American Institute of Aeronautics and Astronautics*, Reston, VA, 1998.

System of Study

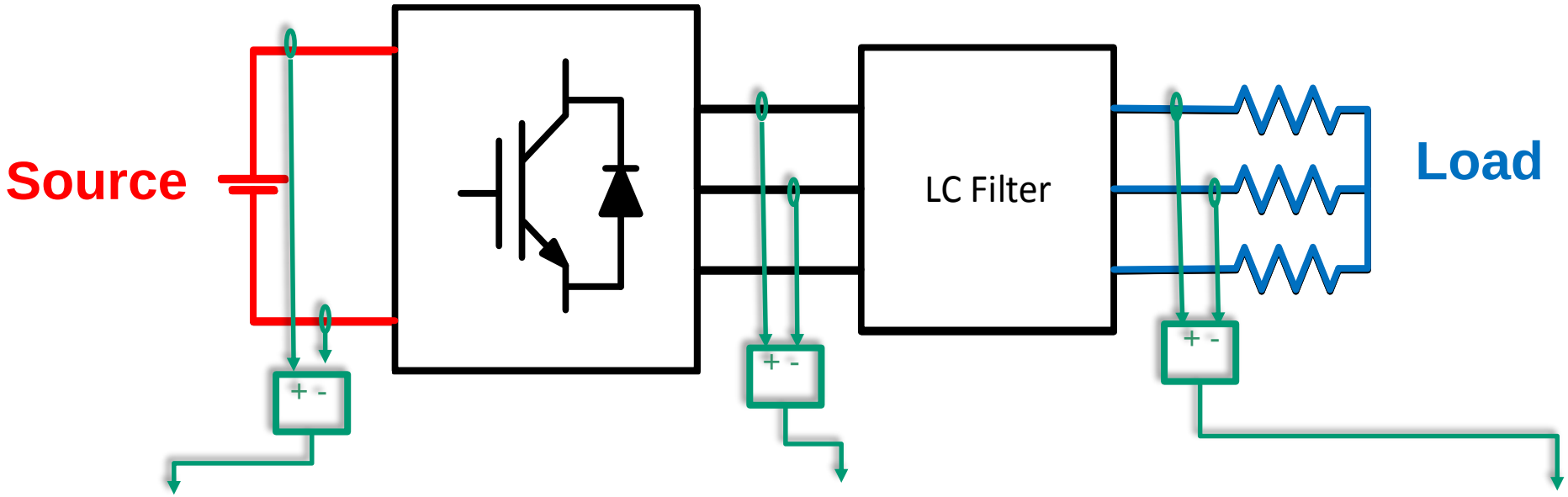

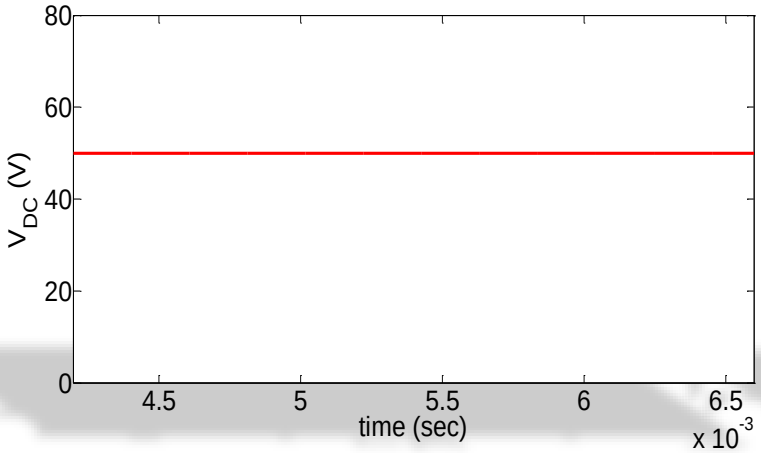

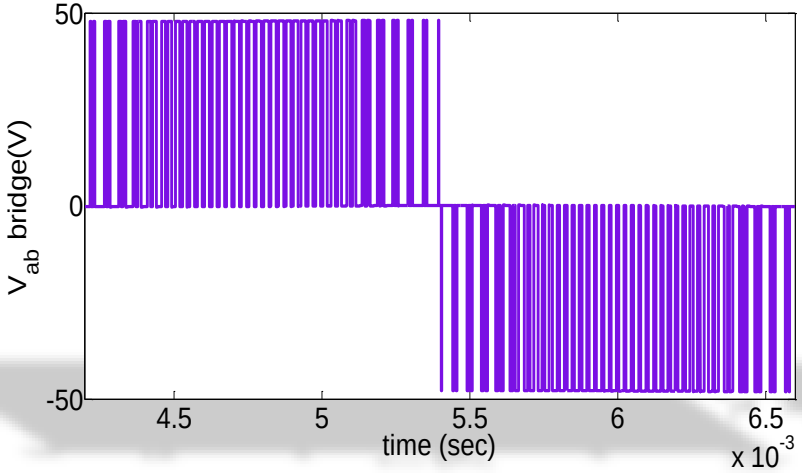

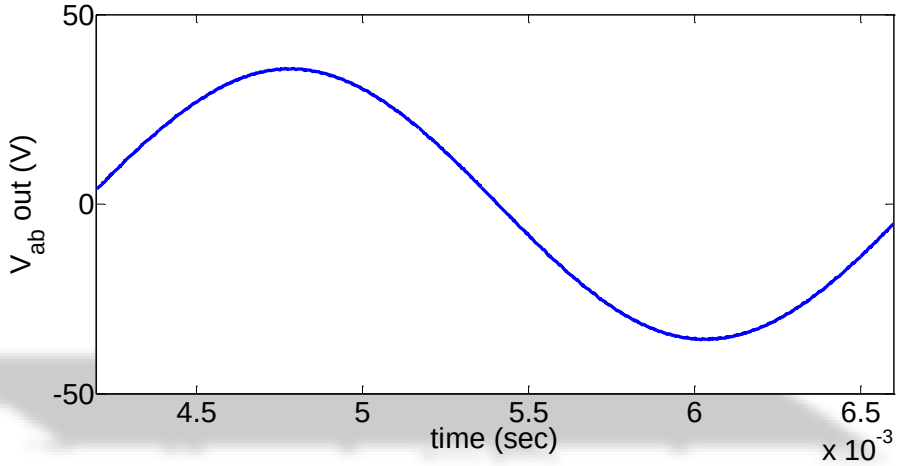

Single Phase Voltage Source Inverter

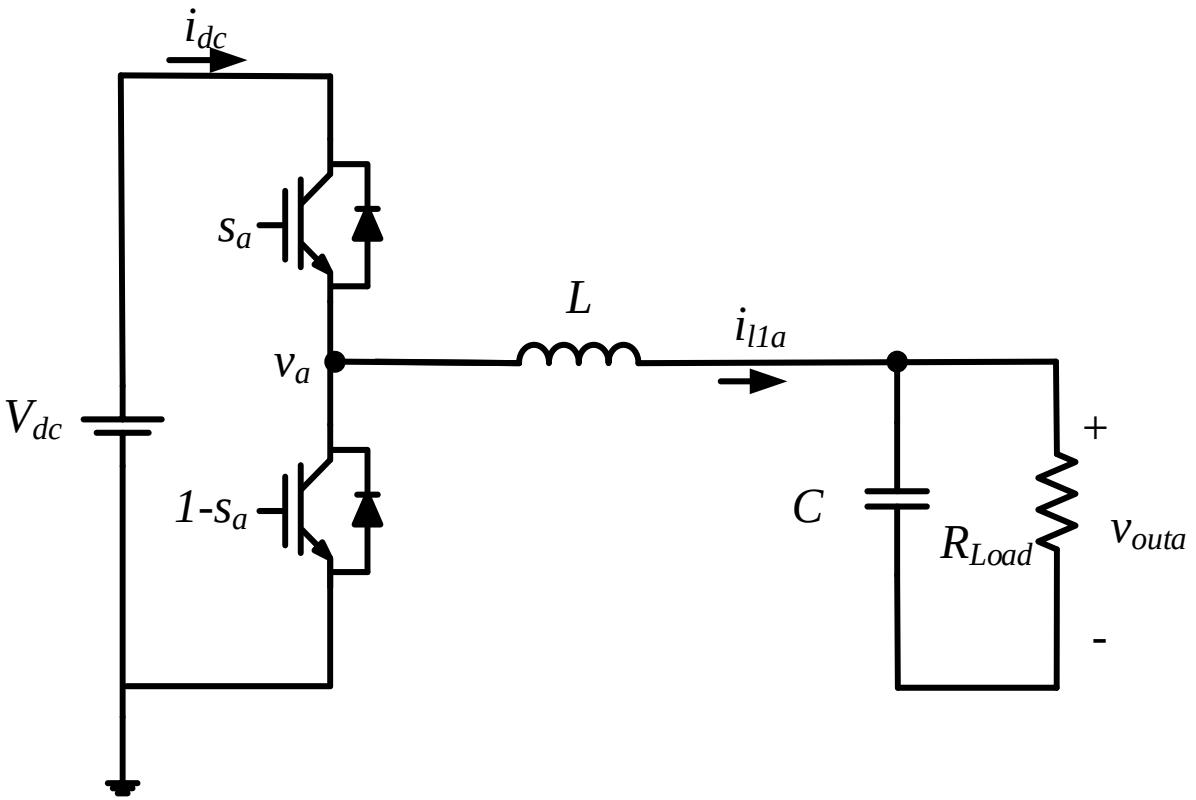

Single Phase Voltage Source Inverter

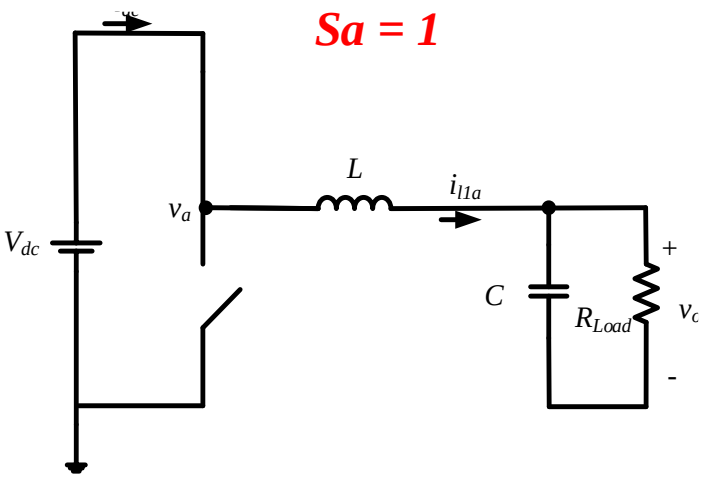

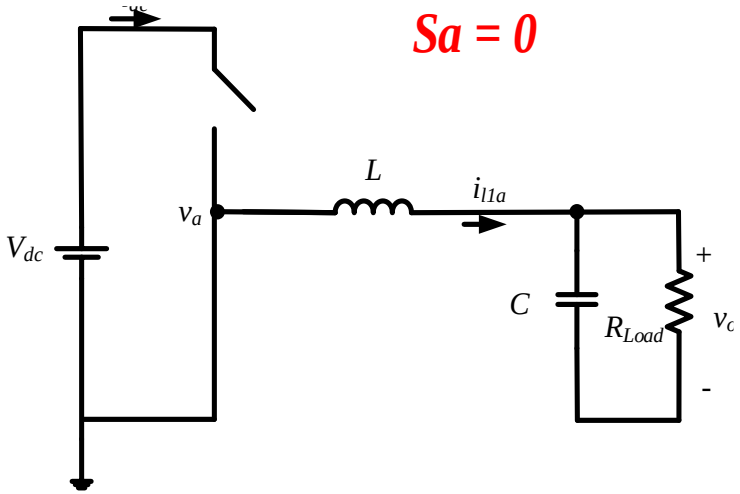

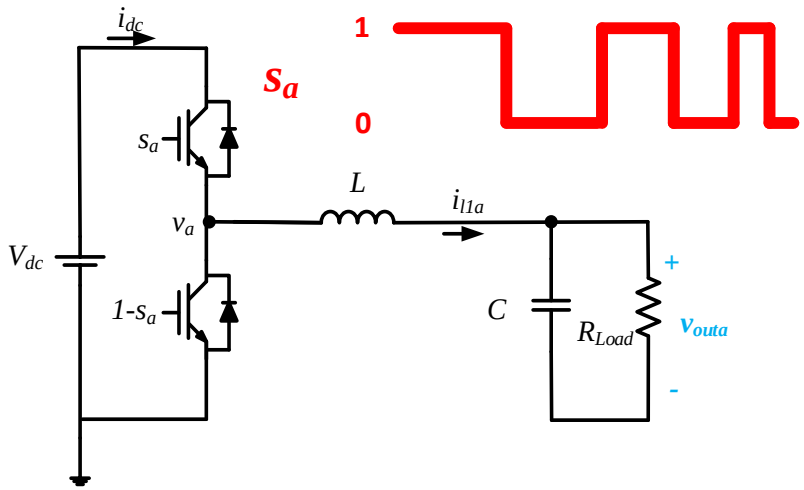

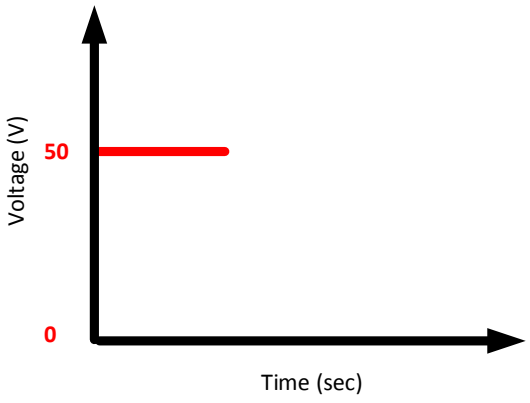

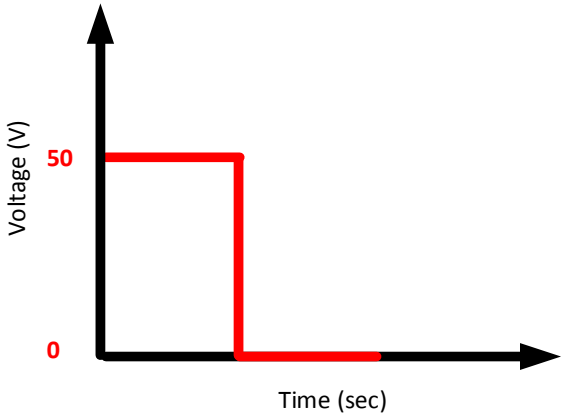

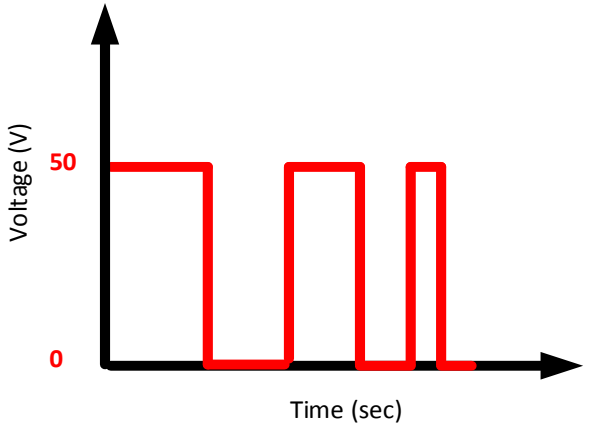

Single Phase VSI output

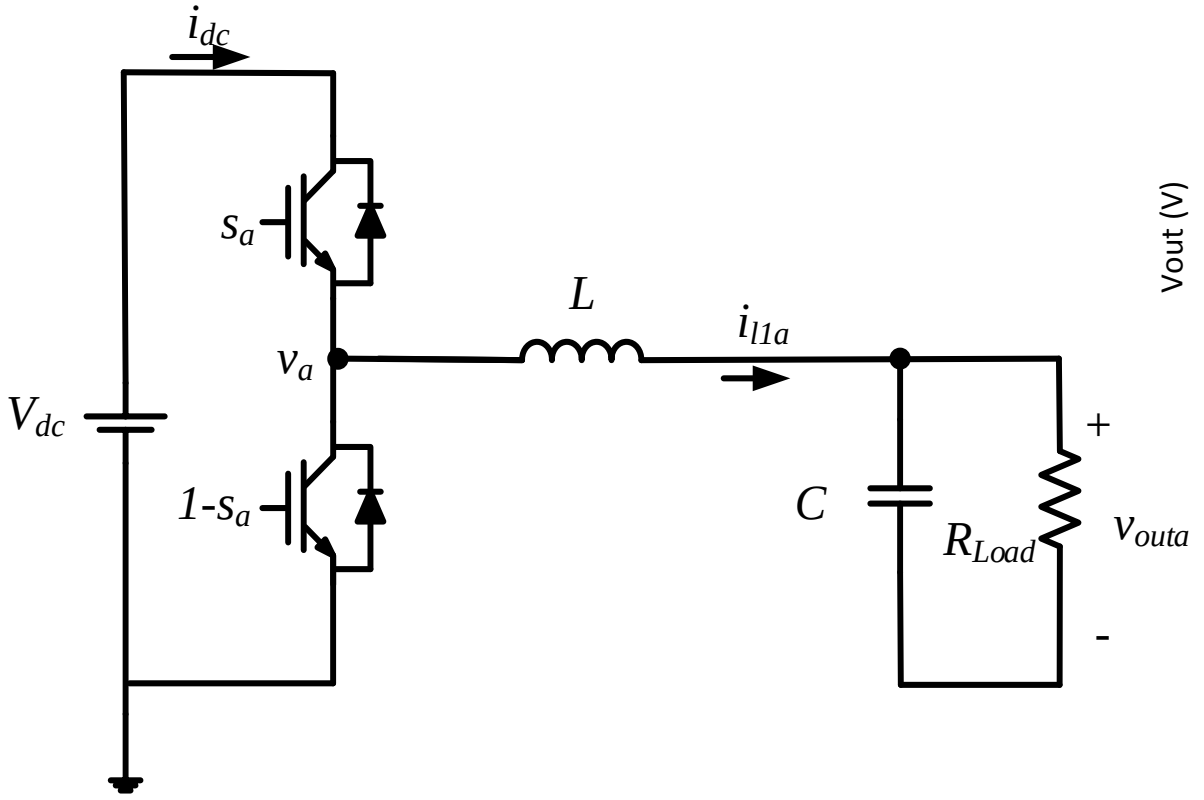

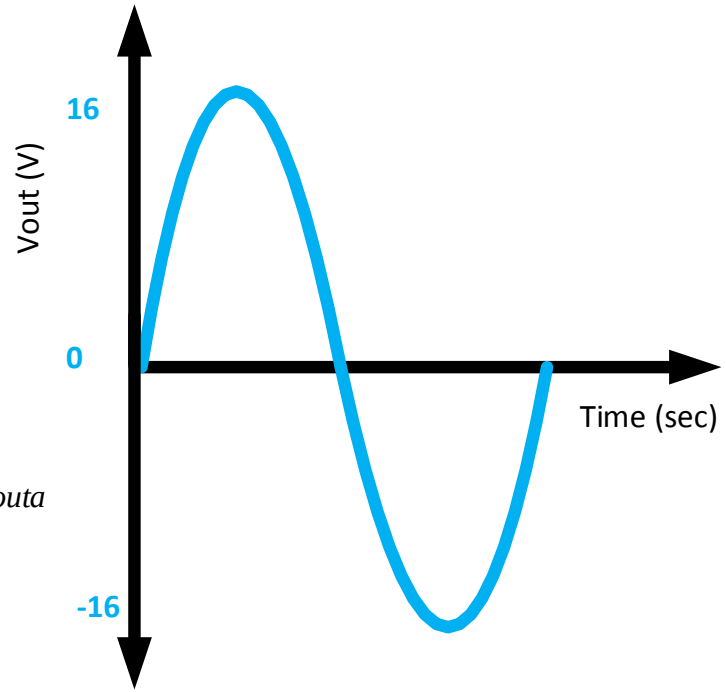

Three Phase Voltage Source Inverter

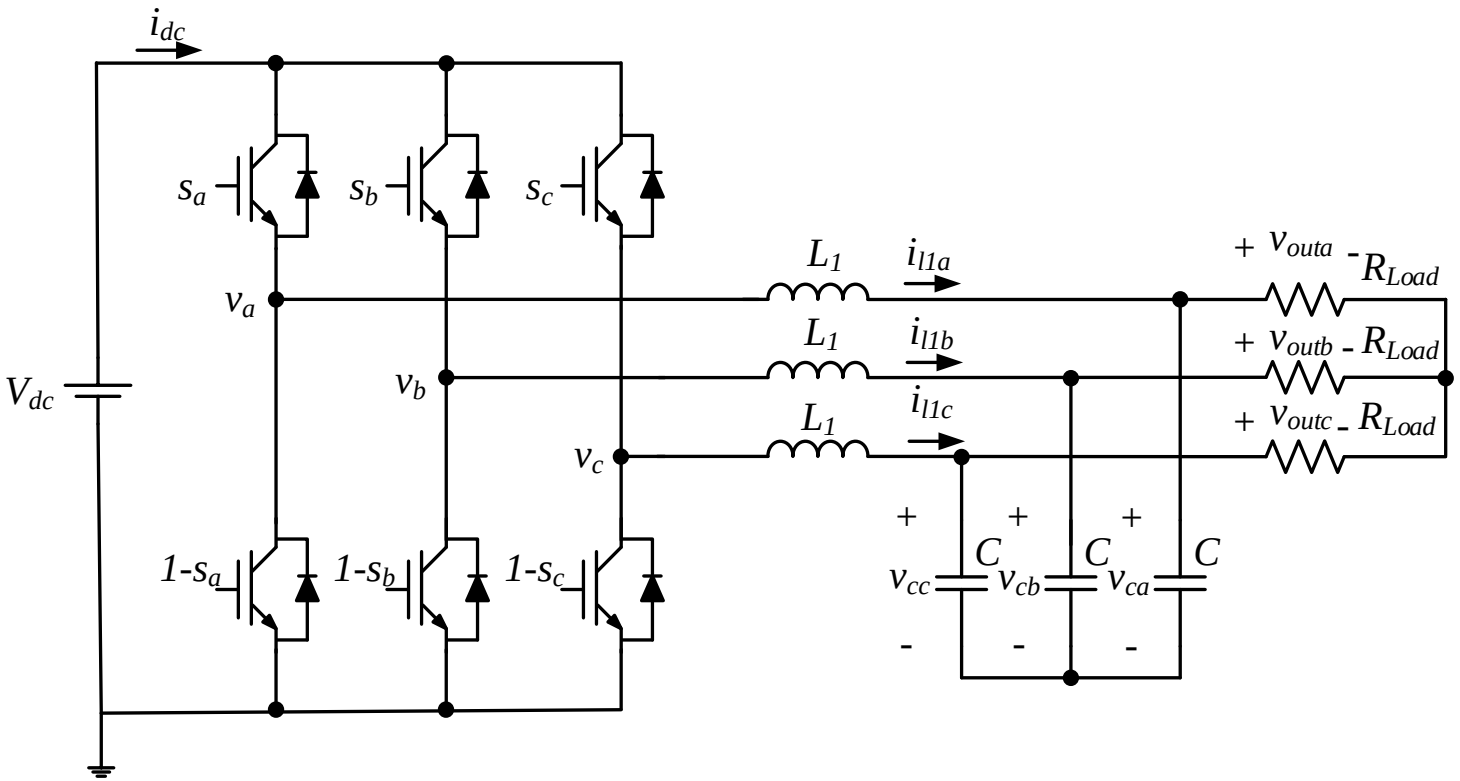

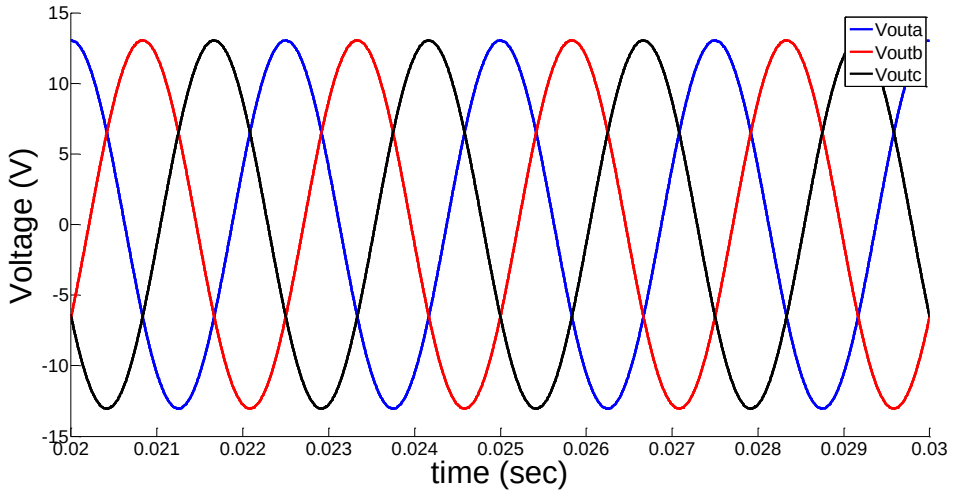

What is THD?

the voltage-time relationship deviates from the pure sine function

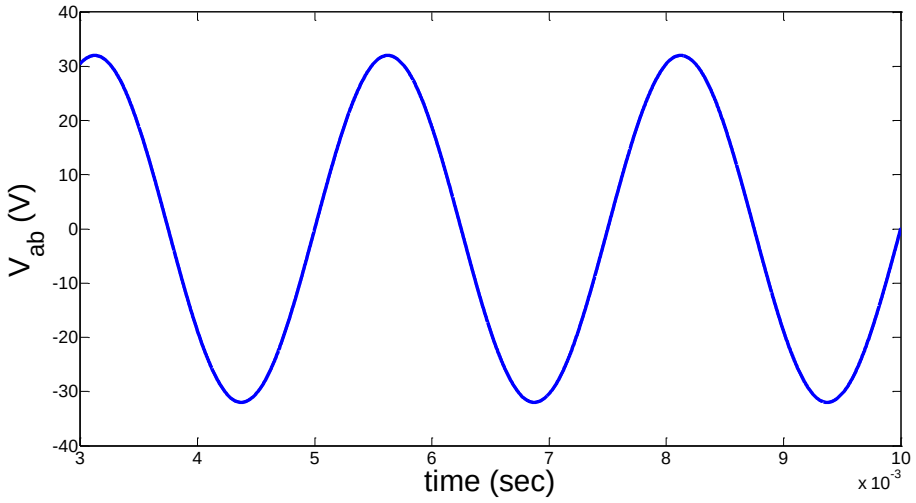

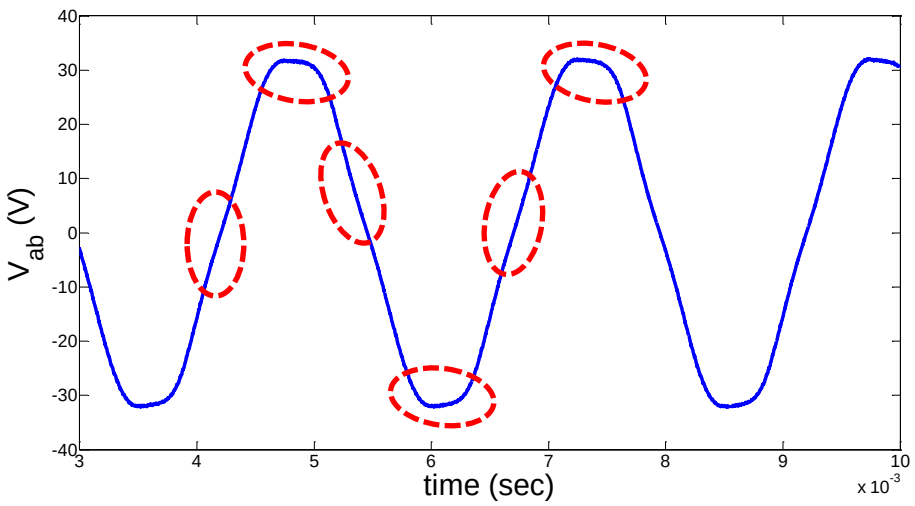

All non-sinusoidal periodic functions can be represented as the sum of :

- A sinusoidal term at the fundamental frequency nf
- Sinusoidal terms (harmonics) with $nf \;\; , n = 2,3, \ldots$
- A DC component (where applicable)

$$THD = \sqrt{\sum_{h=2}^{h=H} \left(\frac{Y_h}{Y_1}\right)^2} = \frac{\sqrt{Y_2^2 + Y_3^2 + \ldots + Y_H^2}}{Y_1}$$

The Model implemented in Simulink and Simulation Results

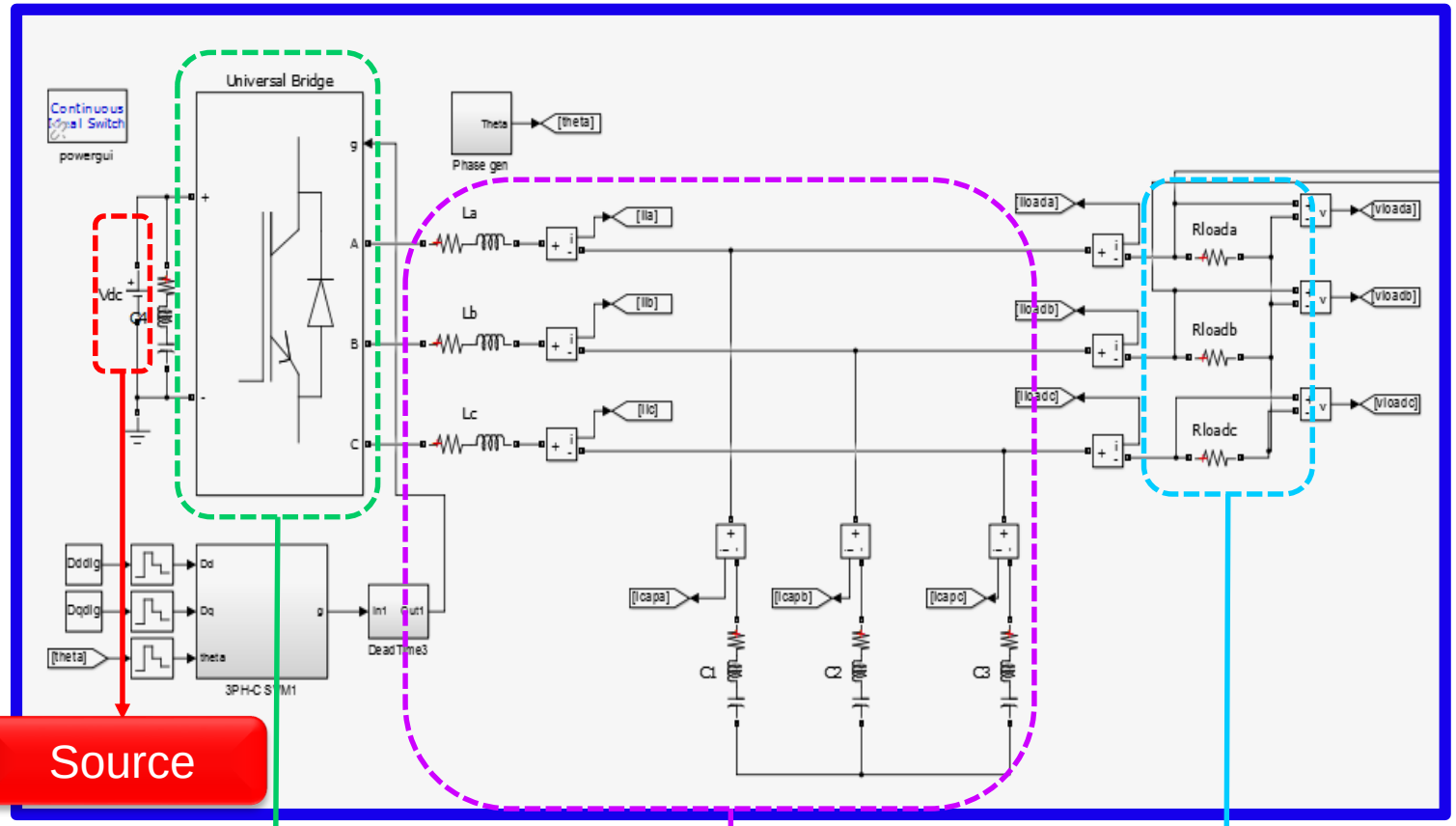

Output Voltage

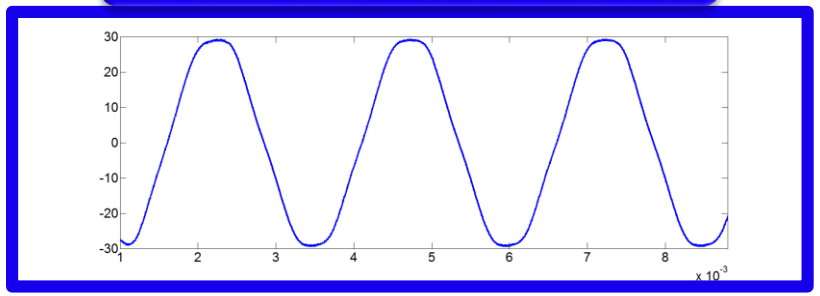

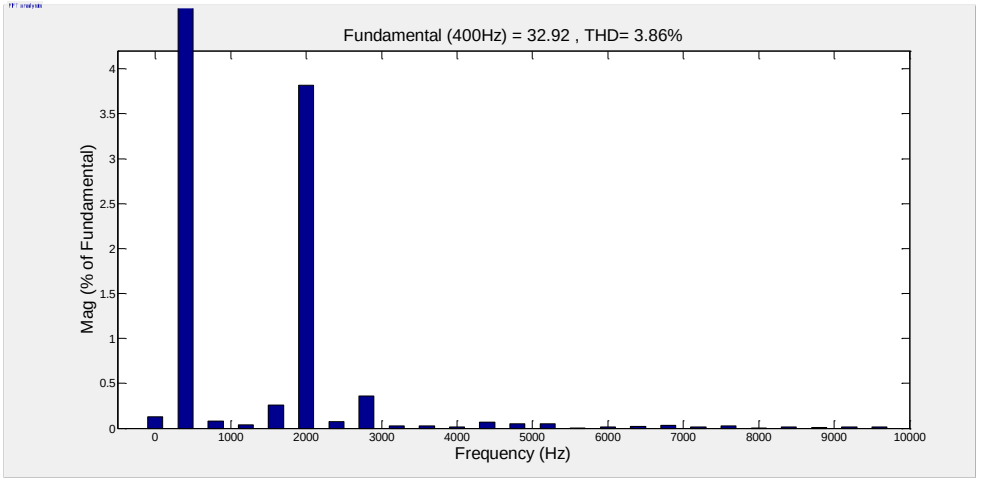

With enough number of samples

Mean Value of THD = 3.822%

Hardware Set-up and Experimental Results

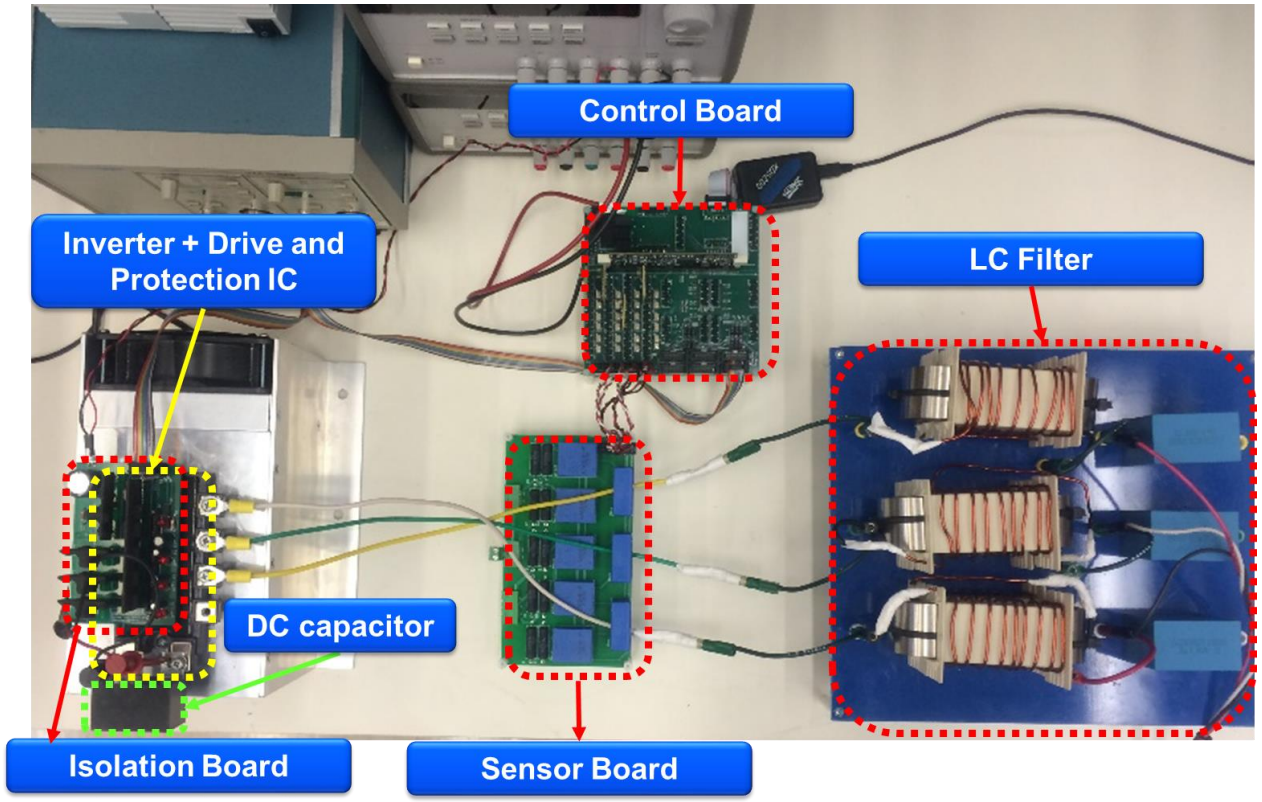

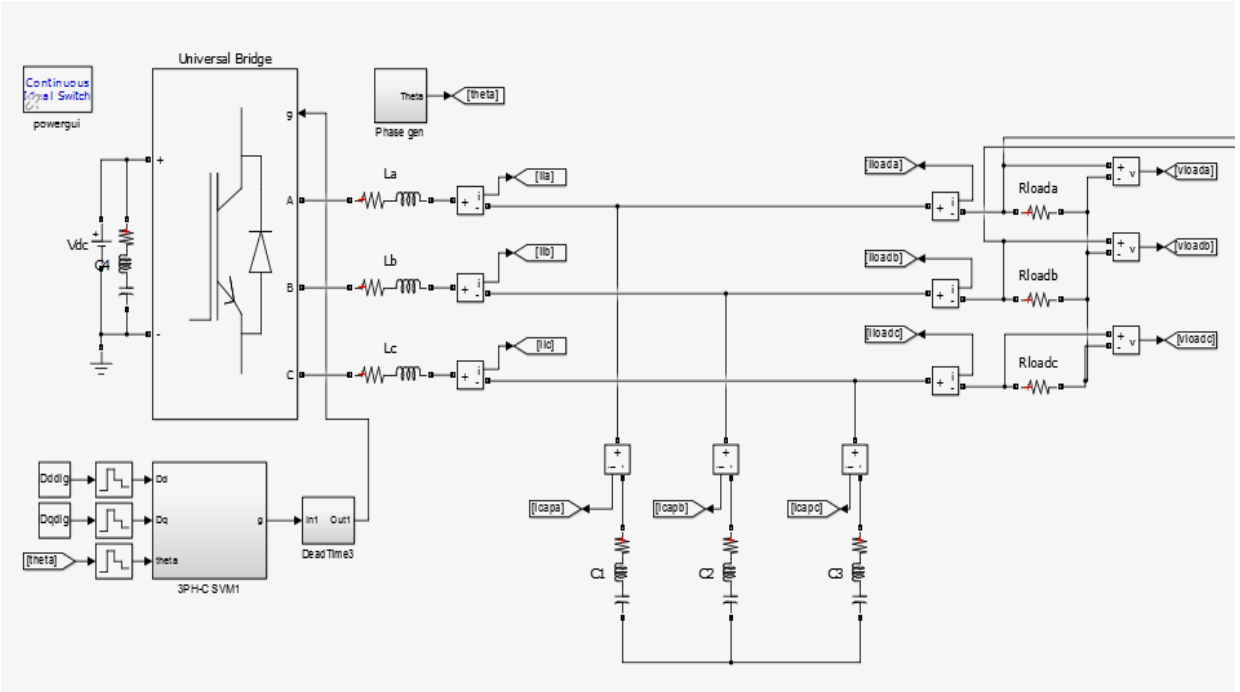

Hardware Set-up and Experimental Results

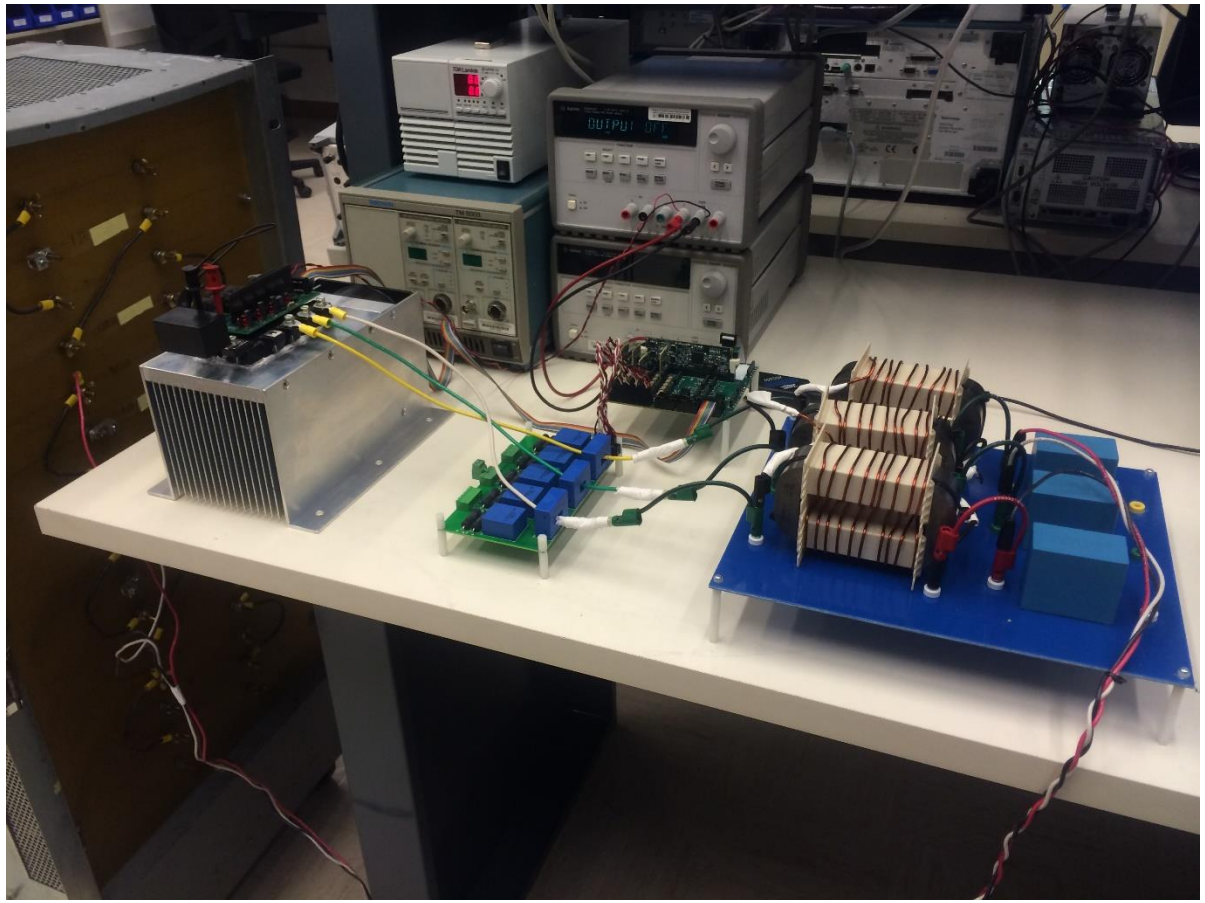

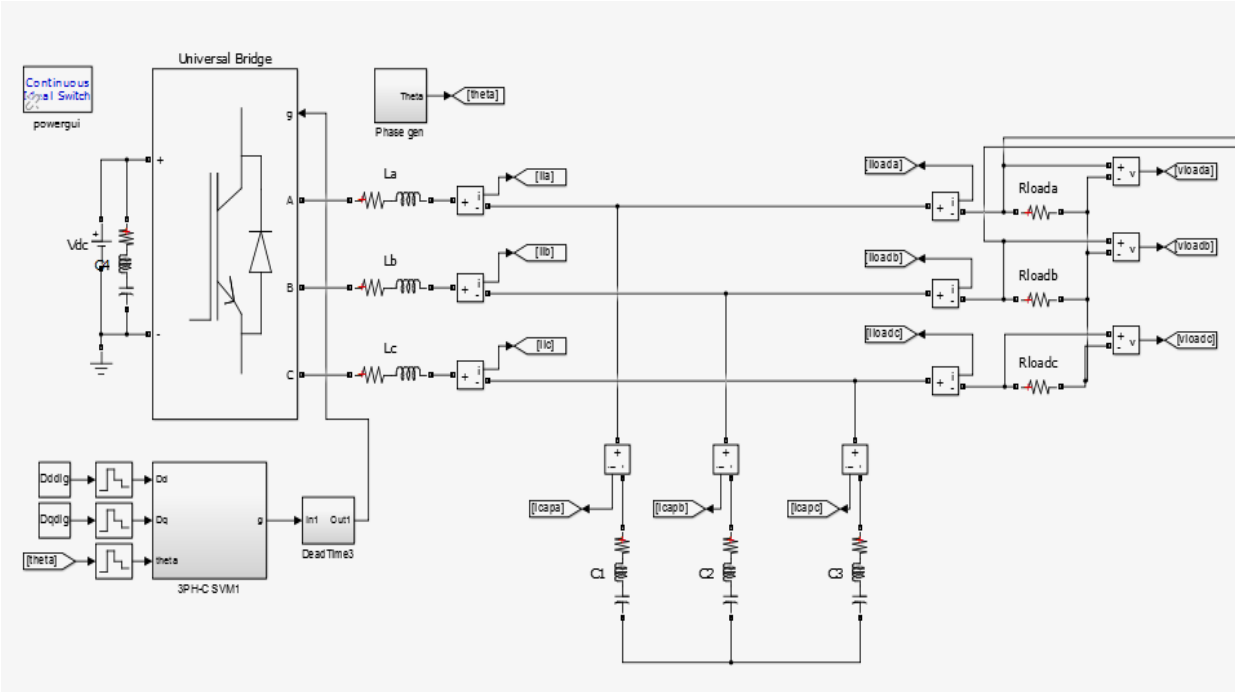

Hardware Set-up and Experimental Results

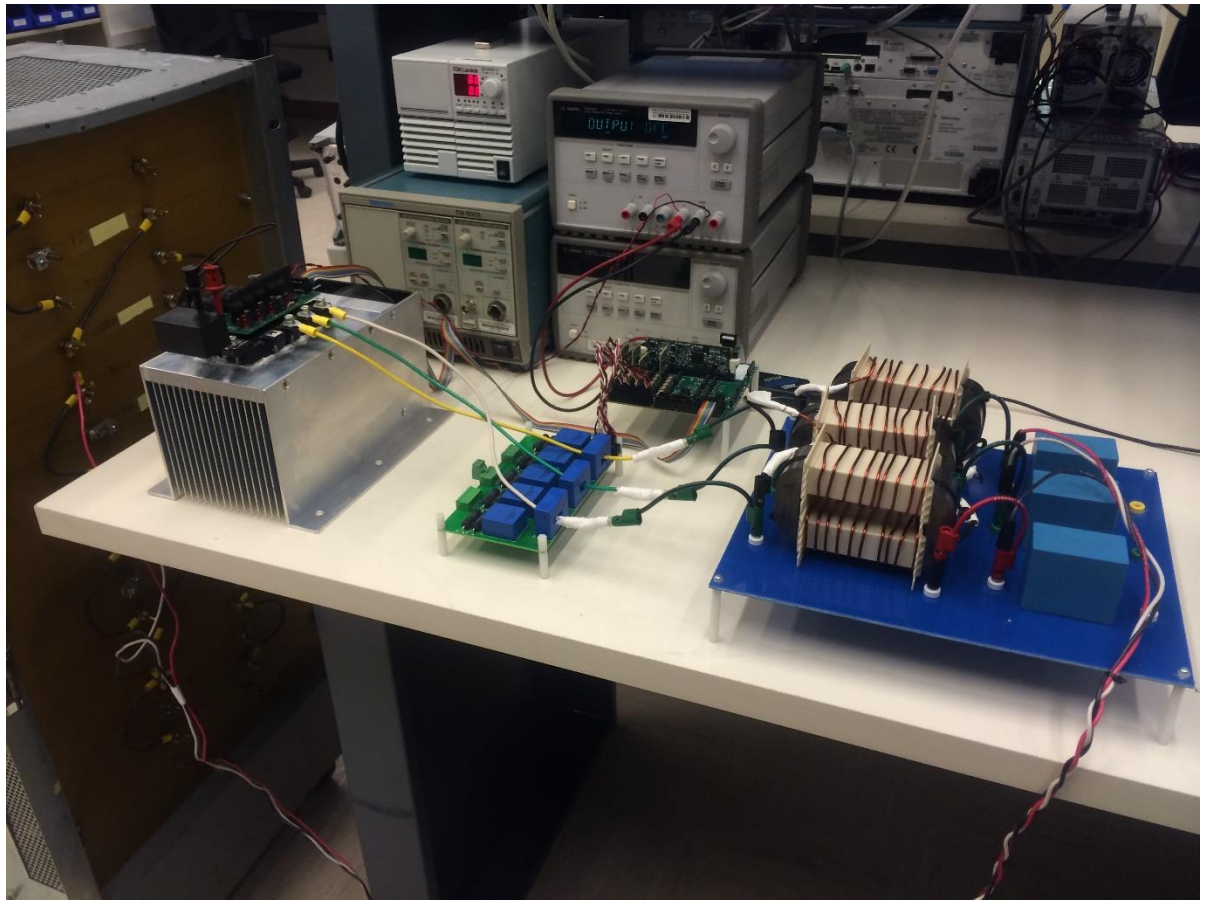

15 Replicated Measurements

Mean Value of THD = 4.36 %

Validation Metric: Mean Comparison

Experimental Results

15 Replicated Measurements

Mean Value of THD = 4.36%

Simulation Results

With enough number of samples

Mean Value of THD = 3.82%

Mean Comparison

$$(\bar{u}_{exp} - \bar{u}_{comp}) \pm \left[t_{n-1,\frac{\alpha}{2}}\right]\left[\frac{s}{\sqrt{n}}\right]$$

With 95% Confidence Interval

THD Error :[0.45%,0.64%]

Area Validation Metric

$$F \rightarrow Simulation\ distribution$$
$$S_n \rightarrow Experimental\ distribution$$

$$d(F, S_n) = \int_{-\infty}^{\infty} |F(SRQ) - S_n(SRQ)|$$

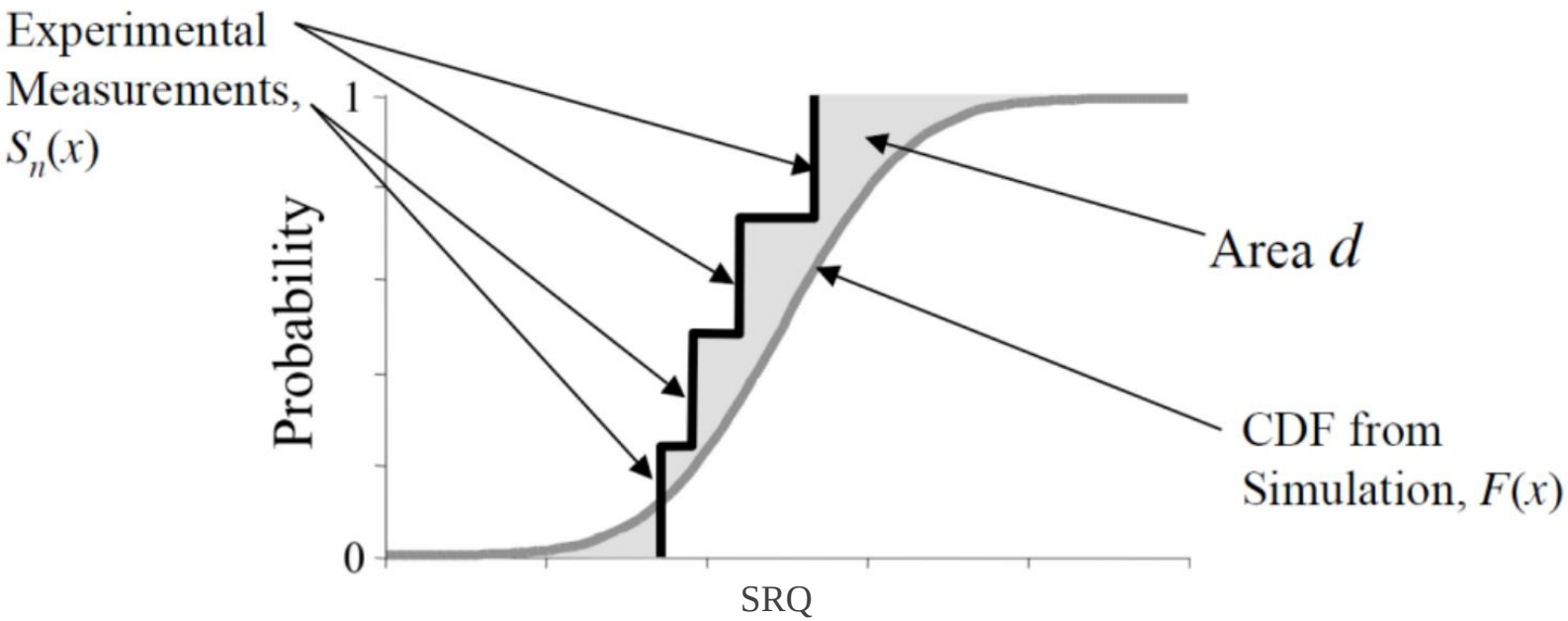

[3] Roy, Christopher J., and William L. Oberkampf. "A comprehensive framework for verification, validation, and uncertainty quantification in scientific computing. "*Computer Methods in Applied Mechanics and Engineering* 200.25 (2011): 2131-2144.

Area Validation Metric

$F \rightarrow Simulation\ distribution$
$S_n \rightarrow Experimental\ distribution$

$$d(F, S_n) = \int_{-\infty}^{\infty} |F(SRQ) - S_n(SRQ)|$$

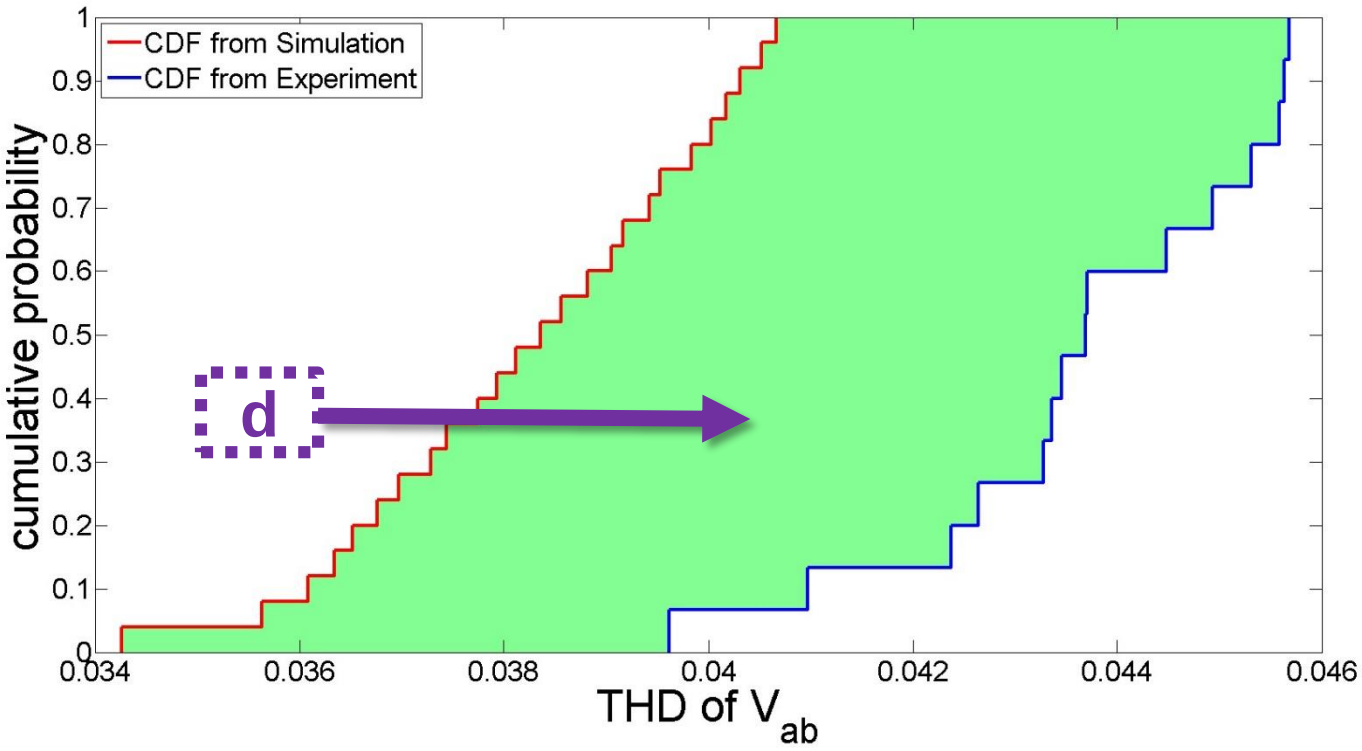

Area Validation Metric

- **The model form uncertainty is shown by adding bounds to the SRQ from nondeterministic simulation with enough number of samples.**

d=0.005

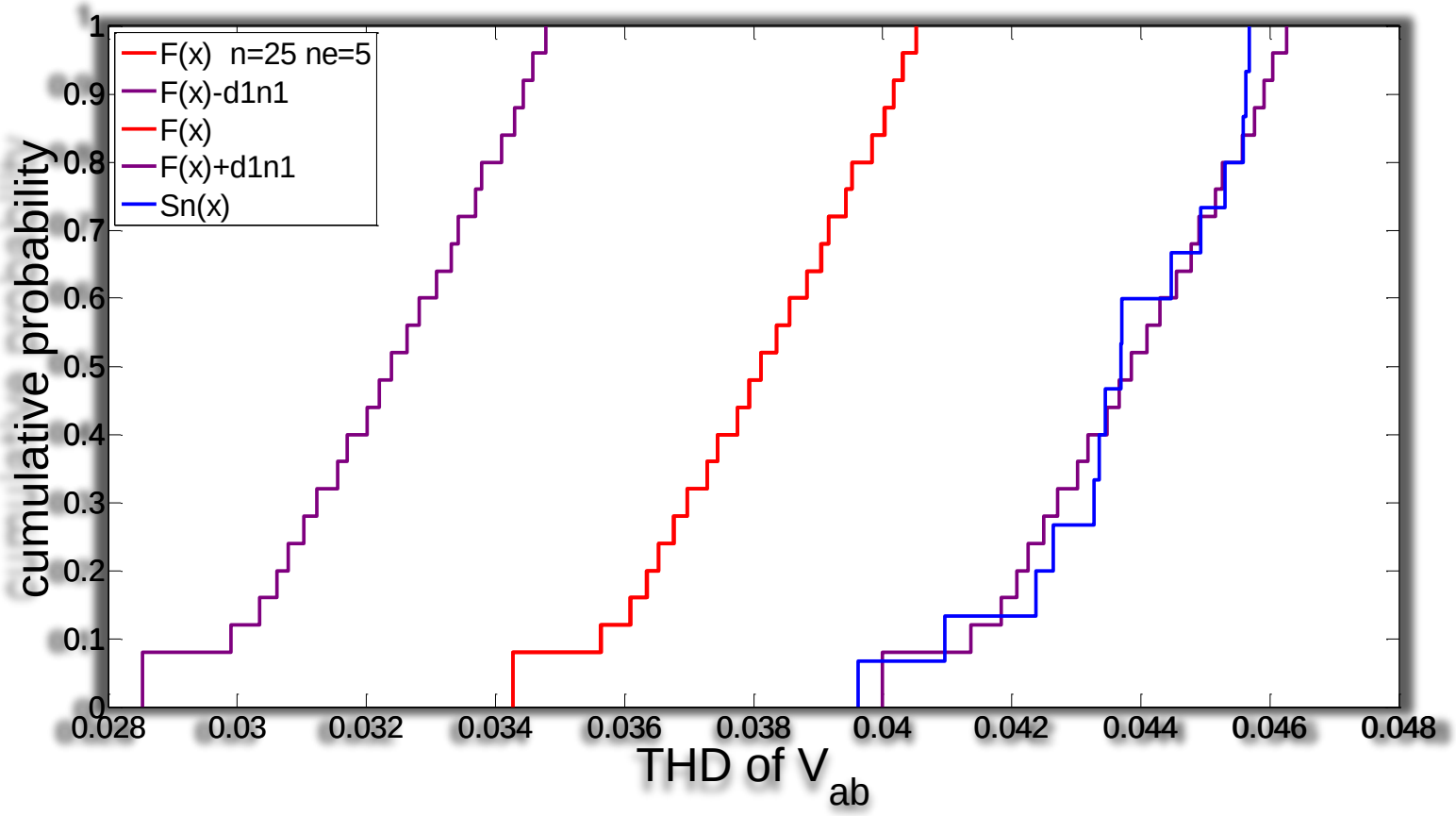

Modified Area Validation Metric

Including measurement Errors:

$$F_s$$

Model Form Uncertainty Interval:

$$\left[F(x) + \left(\frac{1 - F_s}{2}\right) d^+ - \left(\frac{1 + F_s}{2}\right) d^-,\right.$$
$$\left. F(x) + \left(\frac{1 + F_s}{2}\right) d^+ - \left(\frac{1 - F_s}{2}\right) d^-\right]$$

Model Error:

$$E = d^- - d^+$$

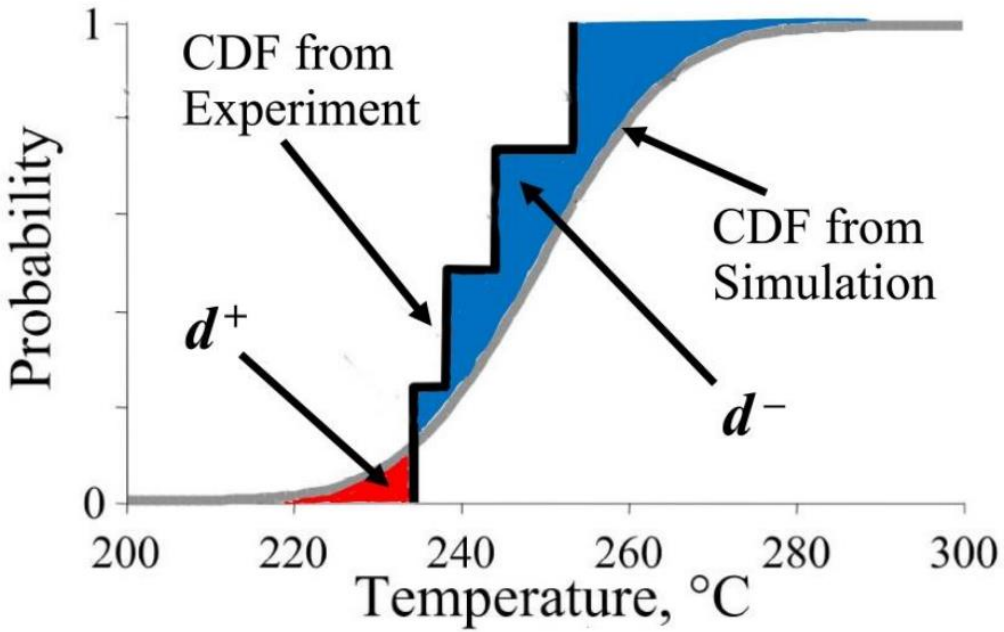

[2] Voyles, Ian T., and Christopher J. Roy. "Evaluation of Model Validation Techniques in the Presence of Uncertainty." (2014).

Modified Area Validation Metric

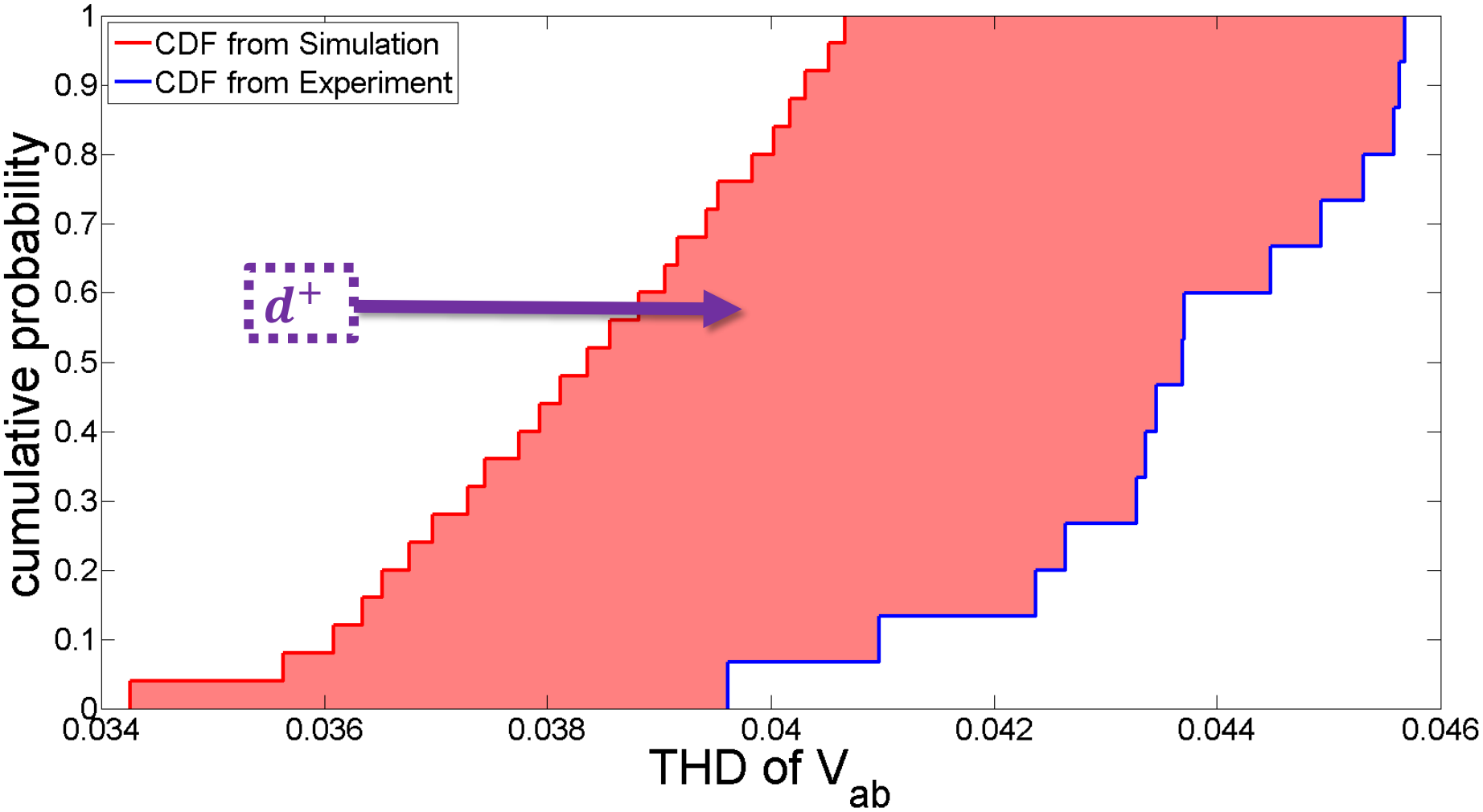

Modified Area Validation Metric Fs=1

Model Form Uncertainty Interval:

$$[F(x) - d^{-}, F(x) + d^{+}]$$

d^{+}=0.005

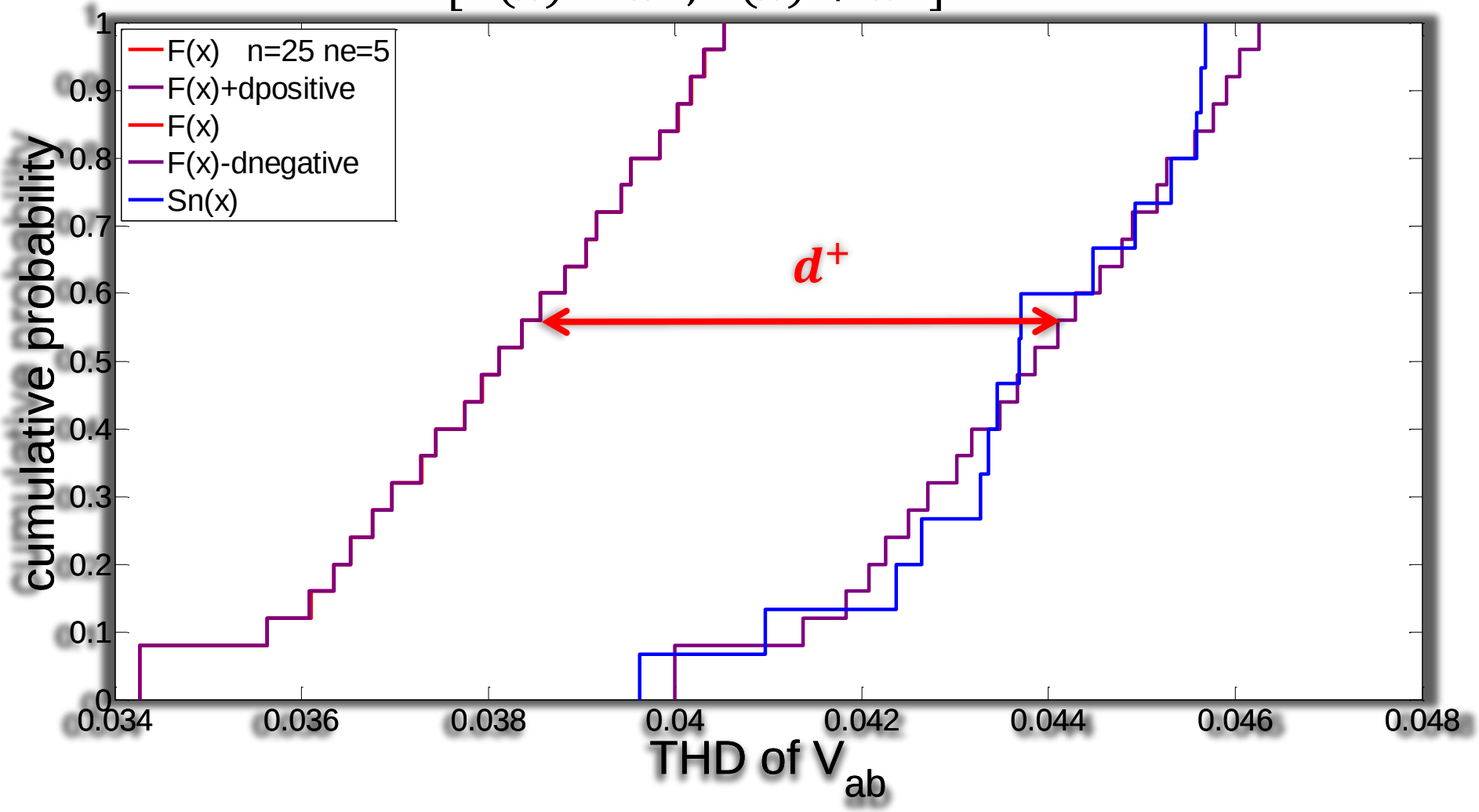

Modified Area Validation Metric Fs=2.58

$$Fs(Nexp) = 1.25 + 1.2\left(\frac{4 - 1.25}{Nexp^{1/3}}\right)$$

$Fs(Nexp)$=2.58

Model Form Uncertainty Interval:

$$\left[F(x) + \left(\frac{1 - F_s}{2}\right)d^{+} - \left(\frac{1 + F_s}{2}\right)d^{-},\right.$$

$$\left.F(x) + \left(\frac{1 + F_s}{2}\right)d^{+} - \left(\frac{1 - F_s}{2}\right)d^{-}\right]$$

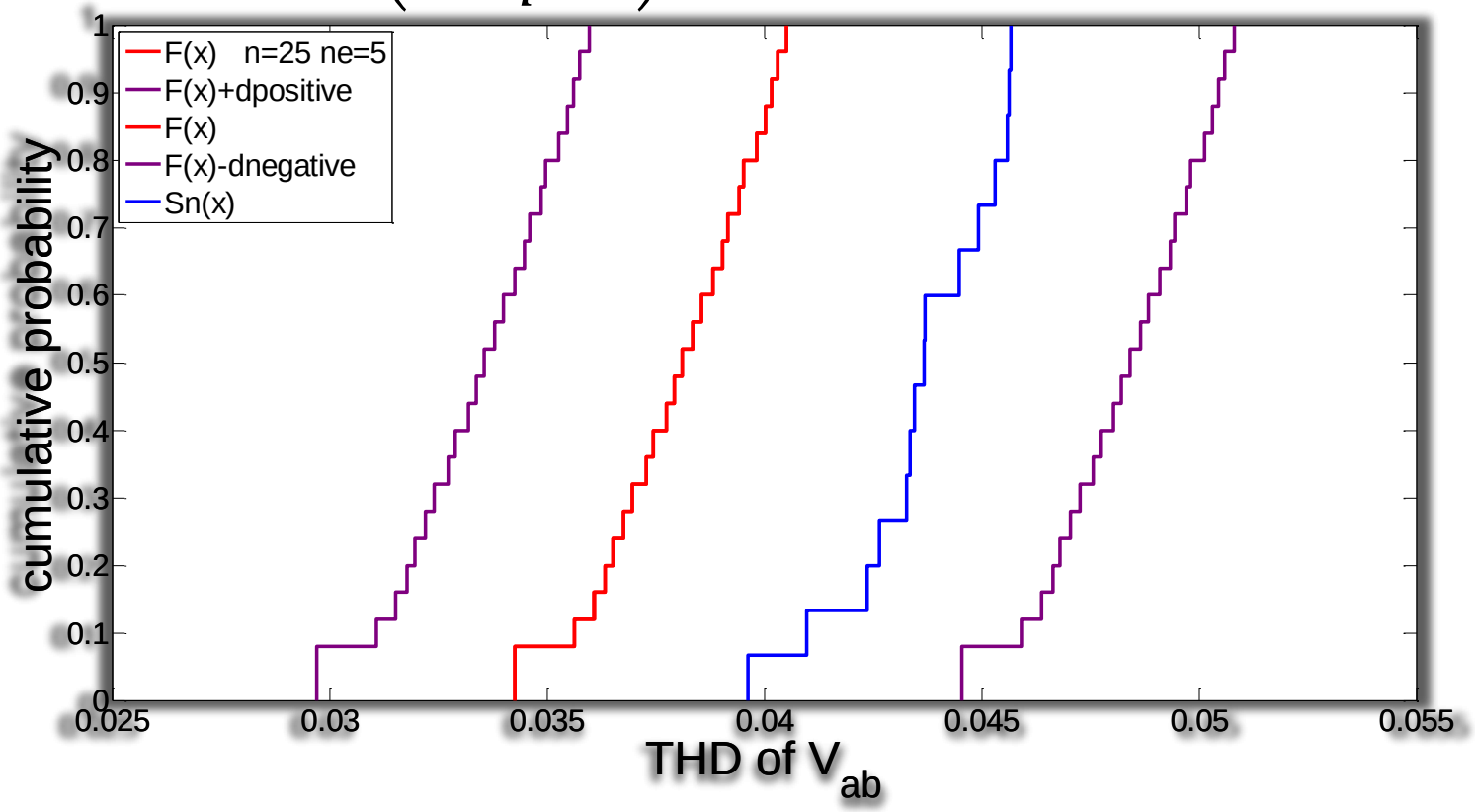

Mean Comparison, AVM, MAVM

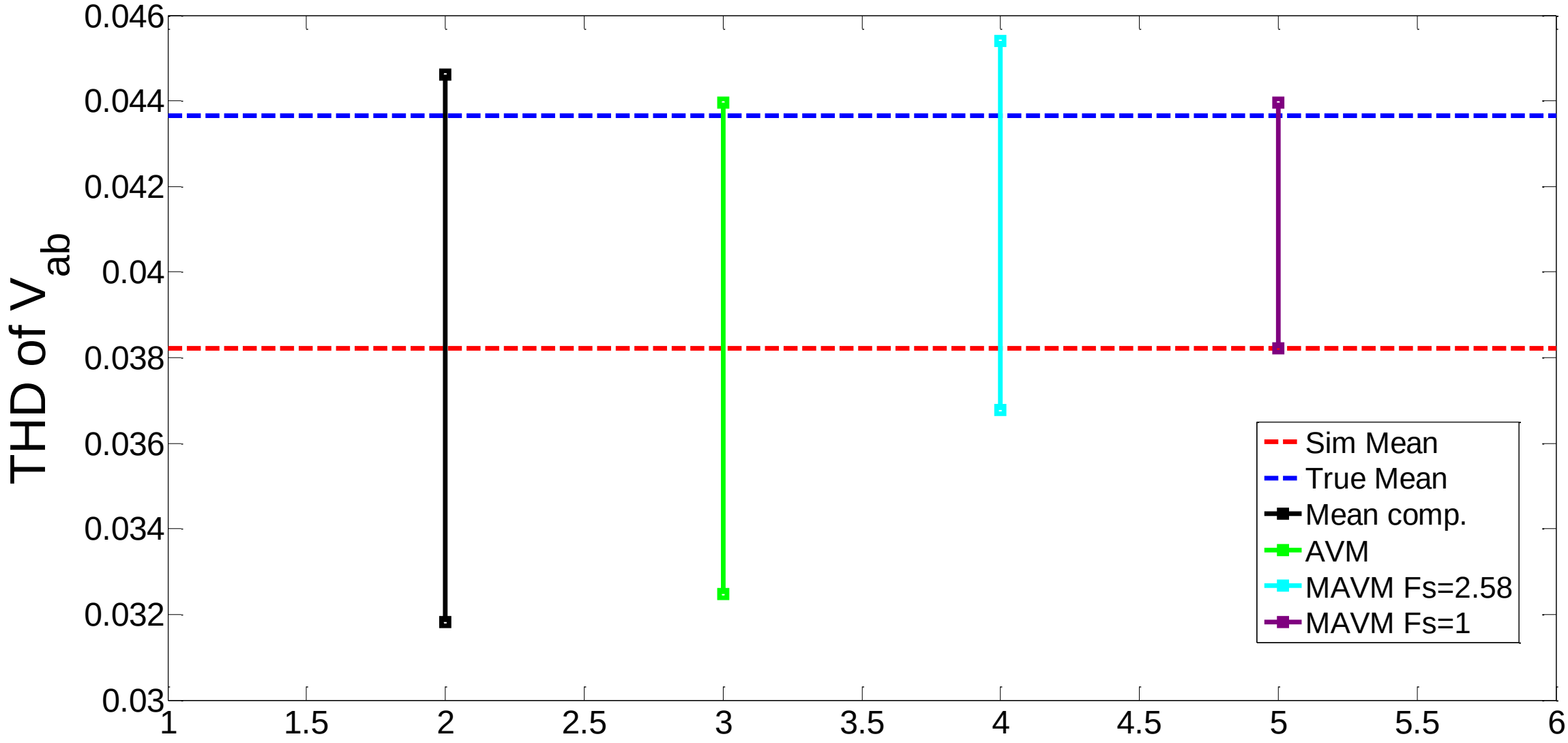

Summary

- **Mean Comparison :**
  - **Minimum number of replicated measurement is required.**
  - **It is just based on mean value without considering standard deviation.**

- **Area validation metric**
  - **Could be used with any number of experimental data available.**
  - **Model error cannot be calculated.**
  - **Does not include measurement uncertainties.**

Modified Area Validation Metric:

- **Could be used with any number of experimental data available.**
- **Model error could be calculated.**
- **Factor of safety could be used to include the measurement errors.**

Thank you !

References

1. AIAA, "Guide for the Verification and Validation of Computational Fluid Dynamics Simulations," *American Institute of Aeronautics and Astronautics*, Reston, VA, 1998.
2. Voyles, Ian T., and Christopher J. Roy. "Evaluation of Model Validation Techniques in the Presence of Uncertainty." (2014).
3. Oberkampf, W. L., & Barone, M. F. (2006). Measures of agreement between computation and experiment: validation metrics. *Journal of Computational Physics*, *217*(1), 5-36.
4. W. L. Oberkampf and C. J. Roy, Verification and Validation in Scientific Computing, Cambridge University Press, Cambridge, 2010.
5. Roy, Christopher J., and William L. Oberkampf. "A comprehensive framework for verification, validation, and uncertainty quantification in scientific computing. " *Computer Methods in Applied Mechanics and Engineering* 200.25 (2011): 2131-2144.
6. Roy, Christopher J., and Michael S. Balch. "A holistic approach to uncertainty quantification with application to supersonic nozzle thrust." *International Journal for Uncertainty Quantification* 2.4 (2012).
7. ASME. (2006). "Guide for Verification and Validation in Computational Solid Mechanics."ASME V&V 10-2006, *American Society of Mechanical Engineers*, New York, NY
8. Ahmed, S., Burgos, R., Roy, C., Boroyevich, D., Mattavelli, P., & Wang, F. (2012, February). Modeling Verification, Validation, and Uncertainty Quantification (VV&UQ) procedure for a two-level three-phase boost rectifier. In*Applied Power Electronics Conference and Exposition (APEC), 2012 Twenty-Seventh Annual IEEE* (pp. 1894-1901). IEEE.